HS3 - 1W Isolated Single Output DC/DC Converters

HAUFE®
„PRECISION FOR YOUR SUCCESS"
... since 1947

The HS3S series are miniature, isolated 1W DC/DC converters in a SIP package. They offer the ideal solution in many space critical applications for board level power distribution. The internal SMD construction makes it possible to offer a product with high performance at low cost.
The series offers smaller size, improved efficiency, lower output ripple noise and 3KVDC isolation.

FEATURES:

- *RoHS compliant*
- *3 KVDC isolation*
- *Efficiency up to 80%,*
- *Operating temperature: -40°C to 105°C*
- *Power density up to 0.90W/cm³*
- *UL 94V-0 package material,*
- *Footprint from 1.17cm²*
- *Industry standard pinout*
- *Input voltage: 3.3V, 5V, 12V, 15V, 24V,*
- *Output voltage: 3.3V, 5V, 9V, 12V, 15V, 24V*
- *Custom solutions available*
- *Optional: Continuous short circuit protection*

H-Model	Nominal Input Voltage (V)	Output Voltage (V)	Output Current (Max./Min) (mA)	Efficiency (%)	Package Style
HS3-0303S10Z30	3,3	3,3	303/30.3	72	SIP7
HS3-0305S10Z30	3,3	5	200/20	74	SIP7
HS3-0503S10Z30	5	3,3	303/30.3	72	SIP7
HS3-0505S10Z30	5	5	200/20	68	SIP7
HS3-0509S10Z30	5	9	111/11.1	78	SIP7
HS3-0512S10Z30	5	12	84/8.1	76	SIP7
HS3-0515S10Z30	5	15	68/6.8	79	SIP7
HS3-0524S10Z30	5	24	42/4.2	81	SIP7
HS3-1203S10Z30	12	3,3	303/30.3	74	SIP7
HS3-1205S10Z30	12	5	200/20	69	SIP7
HS3-1209S10Z30	12	9	111/11.1	76	SIP7
HS3-1212S10Z30	12	12	84/8.4	77	SIP7
HS3-1215S10Z30	12	15	68/6.8	76	SIP7
HS3-1224S10Z30	12	24	42/4.2	84	SIP7
HS3-1505S10Z30	15	5	200/20	69	SIP7
HS3-1512S10Z30	15	12	83/8.3	76	SIP7
HS3-1515S10Z30	15	15	67/6.7	75	SIP7
HS3-2405S10Z30	24	5	200/20	71	SIP7
HS3-2409S10Z30	24	9	111/11.1	78	SIP7
HS3-2412S10Z30	24	12	84/8.4	78	SIP7
HS3-2415S10Z30	24	15	68/6.8	80	SIP7
HS3-2424S10Z30	24	24	42/4.2	80	SIP7

Package Unit: 25

The models listed above is just for standard type. If you need the special specification product, please contact our specialists: **sales@haufe-power.de**

Add suffix "P" for continous short circuit protection e.g. „HS3-0305S10Z30P".

The information and specifications contained in this data sheet are believed to be correct at time of publication. However, HAUFE GmbH & Co. KG accepts no responsibility for consequences arising from printing errors or inaccuracies. Specifications are subject to change without notice. No rights under any patent accompany the sale of any such product(s) or information contained herein.

V1.1/0318 • Stand 0318 • Irrtümer vorbehalten • Copyright © 2018 by HAUFE GmbH & Co. KG

BLECHBEARBEITUNG MAGNETISCHE ABSCHIRMUNGEN INDUKTIVITÄTEN STROMVERSORGUNGEN

HAUFE GmbH & Co. KG • Weilburger Str. 14 • 61250 Usingen • Tel.: +49 6081 9153-0 • info@haufe-uebertrager.de

INPUT CHARACTERISTICS (Min./Typ./Max.):	
Voltage range 3.3V input types (V):	2.9 / 3.3 / 3.6
Voltage range 5V input types (V):	4.5 / 5 / 5.5
Voltage range 12V input types (V) :	11 / 12 / 13.3
Voltage range 15V input types (V):	13.4 / 15 / 16.4
Voltage range 24V input types V):	22 / 24 / 26.6
ISOLATION CHARACTERISTICS:	
Isolation test voltage (VDC):	3000 / - / - (Tested for 1 second)
Resistance (Viso = 1000 VDC) (GΩ):	1 / - / -
ABSOLUTE MAXIMUM RATINGS:	
Short-circuit protection:	1 sec.
Lead temperature 1.5mm from case for 10 seconds:	300°C
Internal power dissipation :	540mW
Input voltage Vin 03 / 05 / 12 /15 / 24:	5.5V / 7V / 15V / 18V / 28V
Comment on AMS: All specs typ. at TA-25°C, nominal input voltage and rated output current unless otherwise specified	
OUTPUT CHRACTERISTICS (Min. / Typ. / Max.):	
Rated Power TA= -40°C to 85°C (W):	- / - / 1
Voltage Set Point Accuracy (%):	See tolerance envelope
Line regulation High VIN to low VIN (%):	- / 1.2 / -
Load Regulation (***) 3V, 5V , 9V output types (%):	- / 13 / -
Load Regulation (***) 12V output (%):	- / 7 / -
Load Regulation (*** 15V output (%):	- / 7 / -
Load Regulation (***) 24V output (%):	- / 7 / -
(= 10% load to rated load)***	
Output Characteristics Notes:	
All specifications typical at TA=25°C, nominal input voltage and rated output current unless otherwise specified.	
GENERAL CHARACTERISTICS (Min. / Typ. / Max.)	
Switching frequency 3.3V, 5V input (kHz):	- / 120 / -
Switching frequency 12V input (kHz):	- / 160 / -
Switching frequency 15V input (kHz):	- / 90 / -
Switching frequency 24V input (kHz):	- / 90 / -
TEMPERATUR CHARACTERISTICS (Min. / Typ. / Max.)	
Derating if the temperature ≥85°C	-40 / - / +105
Storage °C	-50 / - / +130
Case temperature above ambient. 5V output (°C):	- / 35 / -
Case temperature above ambient. All other output (°C):	- / 30 / -
Cooling:	Free air convection

V1.1/0318 • Stand 0318 • Irrtümer vorbehalten • Copyright © 2018 by HAUFE GmbH & Co. KG

BLECHBEARBEITUNG
MAGNETISCHE ABSCHIRMUNGEN
INDUKTIVITÄTEN
STROMVERSORGUNGEN

TOLERANCE ENVELOPES

HS3S-2405XXXX

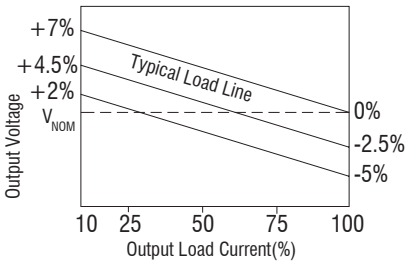

HS3S-2412XXXX HS3S-2415XXXX

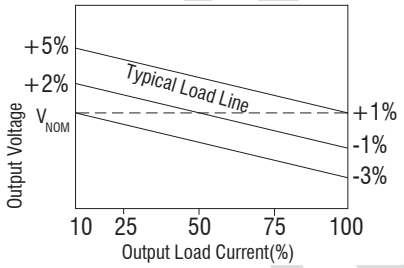

other HS3S types

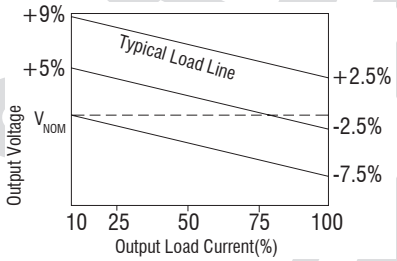

MECHANICAL DIMENSION

SIP Package

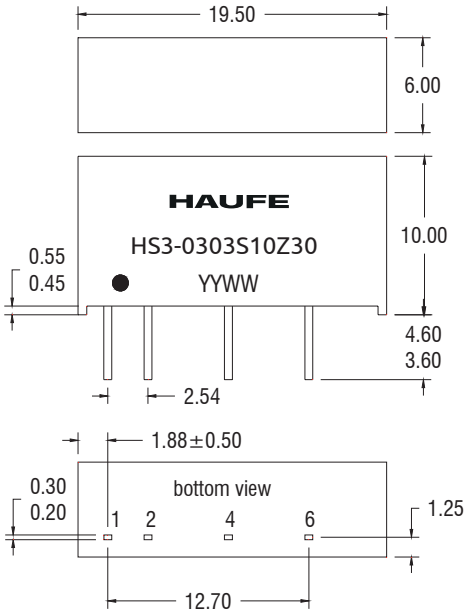

All dimensions in mm ±0.25mm. All pins on a 2.54mm pitch and within ±0.25mm of true position.

TEMPERATURE DERATING GRAPHS

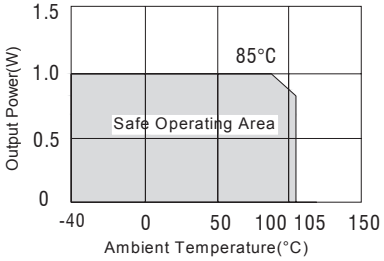

PIN CONNECTIONS

7 PIN SIP	
Pin	Function
1	+Vin
2	-Vin
4	-Vout
6	+Vout

RECOMMENDED FOOTPRINT DETAILS

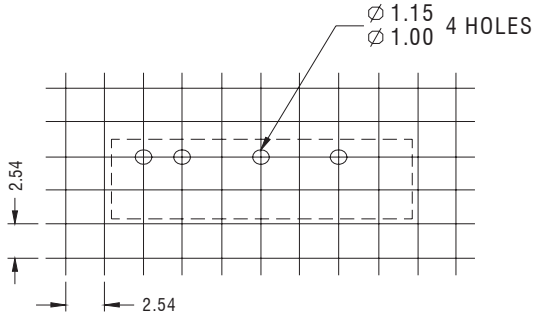

All dimensions in mm±0.25mm

TUBE OUTLINE DIMENSIONS

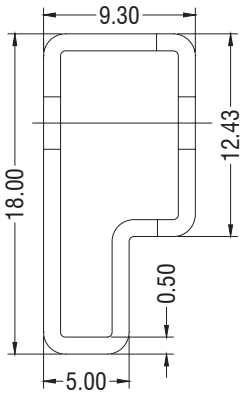

All dimensions in mm±0.25mm

Tube Quantity : 25PCS

V1.1/0318 • Stand 0318 • Irrtümer vorbehalten • Copyright © 2018 by HAUFE GmbH & Co. KG

INDUKTIVITÄTEN
STROMVERSORGUNGEN
BLECHBEARBEITUNG
MAGNETISCHE ABSCHIRMUNGEN