HAUFE

H-SERIE

DC/DC-Converter

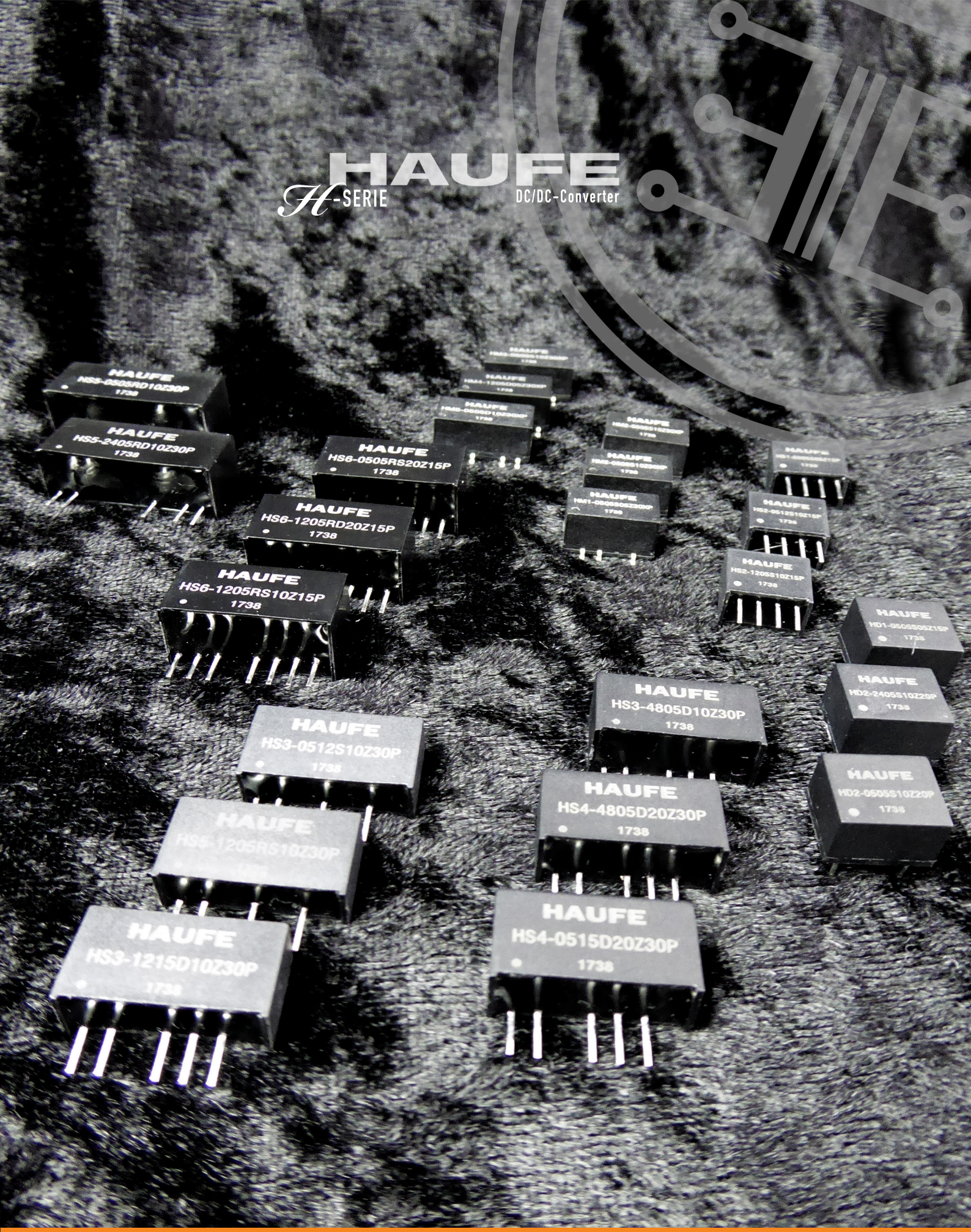

HAUFE®

„PRECISION FOR YOUR SUCCESS"

... since 1947

HM1 - 0.5W 3KVDC Isolated Single Output SMD DC/DC Converters

HAUFE®
„PRECISION FOR YOUR SUCCESS"
... since 1947

Miniature surface mounted DC/DC Converters are an ideal and economical solution for many applications where noise reduction, voltage isolation, voltage conversion in distributed power systems is required. these converters are qualified for the higher temperatures requested by lead-free reflow solder processes, especially for automated SMD production lines.

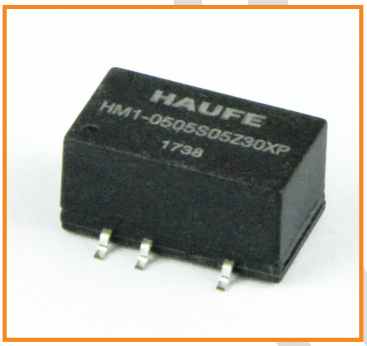

FEATURES:

- *RoHS compliant*
- *Efficiency up to 80%*
- *Single isolated output*
- *3KVDC isolation*
- *Custom solutions available*
- *UL 94V-0 package material*
- *Operating temperature: -40 to +105 °C*
- *Input voltage: 3.3V, 5V,12V,15V,24V*
- *Output voltage: 3.3V, 5V, 9V, 12V,15V*
- *Optional: Continuous short circuit protection*

HM1-XXYYS05Z30/X/P	Nominal Input Voltage (V)	Output Voltage (V)	Output Current (Max./Min) (mA)	Efficiency (%)
HM1-0303S05Z30	3.3	3.3	152/15.2	72
HM1-0305S05Z30	3.3	5	100/10	77
HM1-0309S05Z30	3.3	9	55.5/5.55	77
HM1-0312S05Z30	3.3	12	41.6/4.16	77
HM1-0315S05Z30	3.3	15	33.3/3.33	80
HM1-0503S05Z30	5	3.3	152/15.2	74
HM1-0505S05Z30	5	5	100/10	69
HM1-0509S05Z30	5	9	55.5/5.55	75
HM1-0512S05Z30	5	12	41.6/4.16	78
HM1-0515S05Z30	5	15	33.3/3.3	78
HM1-1203S05Z30	12	3.3	152	74
HM1-1205S05Z30	12	5	100	67
HM1-1209S05Z30	12	9	55.5	73
HM1-1212S05Z30	12	12	41.6/4.16	74
HM1-1215S05Z30	12	15	33.3/3.33	75
HM1-1505S05Z30	15	5	100	77
HM1-1515S05Z30	15	15	33.3	75
HM1-2403S05Z30	24	3.3	152	74
HM1-2405S05Z30	24	5	100	67
HM1-2409S05Z30	24	9	55.5	73
HM1-2412S05Z30	24	12	41.7	74
HM1-2415S05Z30	24	15	33.3	75

Package Unit: -

Optional: suffix "X" = has no Pin 5, 10, 12 e.g.: HM1-1212S05Z30X
Optional: suffix "P" = continuous short circuit protection, e.g.: HM1-1212S05Z30XP

The models listed above is just for standard type. If you need the special specification product, please contact our specialists: sales@haufe-power.de

The information and specifications contained in this data sheet are believed to be correct at time of publication. However, HAUFE GmbH & Co. KG accepts no responsibility for consequences arising from printing errors or inaccuracies. Specifications are subject to change without notice. No rights under any patent accompany the sale of any such product(s) or information contained herein.

V1.1/0318 • Stand 0318 • Irrtümer vorbehalten • Copyright © 2018 by HAUFE GmbH & Co. KG

BLECHBEARBEITUNG MAGNETISCHE ABSCHIRMUNGEN INDUKTIVITÄTEN STROMVERSORGUNGEN

HAUFE GmbH & Co. KG • Weilburger Str. 14 • 61250 Usingen • Tel.: +49 6081 9153-0 • info@haufe-uebertrager.de

INPUT CHARACTERISTICS (Min./Typ./Max.):	
Voltage range 3.3V input types (V):	2.9 / 3.3 / 3.6
Voltage range 5V input types (V):	4.5 / 5 / 5.5
Voltage range 12V input types (V) :	11 / 12 / 13.3
Voltage range 15V input types (V):	13.4 / 15 / 16.4
Voltage range 24V input types V):	22 / 24 / 26.6

ISOLATION CHARACTERISTICS:	
Isolation test voltage (VDC):	3000 / - / - (Tested for 1 second)
Resistance (Viso = 1000 VDC) (GΩ):	1 / - / -

ABSOLUTE MAXIMUM RATINGS:	
Short-circuit protection:	1 sec.
Lead temperature 1.5mm from case for 10 seconds:	300°C
Internal power dissipation :	610mW
Input voltage Vin:	03= 5.5V / 05=7V / 12=15V / 15=18V / 24=28V

Comment on AMS:

All specs typ. at TA-25°C, nominal input voltage and rated output current unless otherwise specified

OUTPUT CHRACTERISTICS (Min. / Typ. / Max.):	
Rated Power TA= -40°C to 85°C:	- / - / 0.5
Voltage Set Point Accuracy (%):	See tolerance envelope
Line regulation High VIN to low VIN (%):	/ 1.0 / 1.2
Load regulation:	
03XX, 0503, 1203, 2403	- / 10 / 14
0505, 1205, 2405	- / 13 / 15
0509, 1209, 2409	- / 8.0 / 9.0
0512, 1212, 2412	- / 6.5 / 7.5
0515,1215, 1515, 2415	- / 6 / 7.0

*(*** = 10% load to rated load)*

GENERAL CHARACTERISTICS (Min. / Typ. / Max.)	
Switching frequency (all output types) (kHz):	- / 120 / -

TEMPERATUR CHARACTERISTICS (Min. / Typ. / Max.)	
Derating if the temperature is ≥85°C (°C):	-40 / - / 105
Storage temperature (°C):	-55 / - / 125
Cooling:	Free air convection

TEMPERATURE DERATING GRAPHS

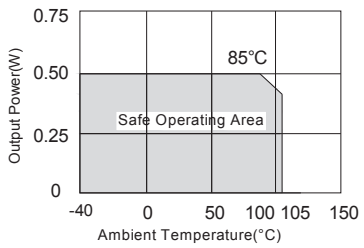

TOLERANCE ENVELOPES

3.3V output types

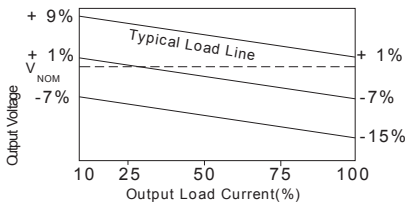

All other types

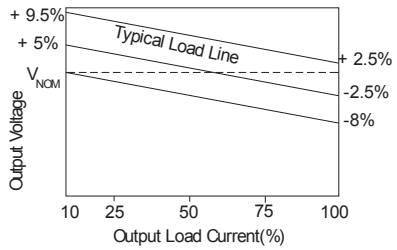

V1.1/0318 • Stand 0318 • Irrtümer vorbehalten • Copyright © 2018 by HAUFE GmbH & Co. KG

INDUKTIVITÄTEN
STROMVERSORGUNGEN
BLECHBEARBEITUNG
MAGNETISCHE ABSCHIRMUNGEN

MECHANICAL DIMENSION

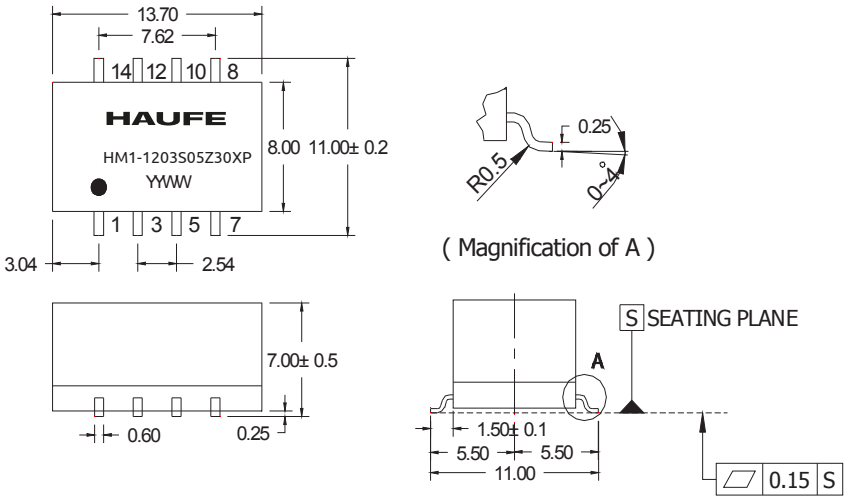

All dimensions in mm ±0.25mm. All pins on a 2.54mm pitch and within ±0.25mm of true position.
Weight: 1.21g

PIN CONNECTIONS

8 PIN SMD		
Pin	Function	Add suffix "X" function
1	-Vin	-Vin
3	+Vin	+Vin
5	NA	No Pin
7	-Vout	-Vout
8	+Vout	+Vout
10	NA	No Pin
12	NA	No Pin
14	NA	NA

NA - Not available for electrical connection.

RECOMMENDED FOOTPRINT DETAILS

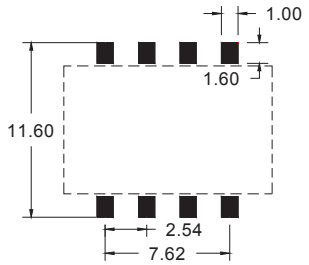

All pins on a 2.54mm pitch.

Unless otherwise stated all dimensions in mm ± 0.5mm.

TUBE OUTLINE DIMENSIONS

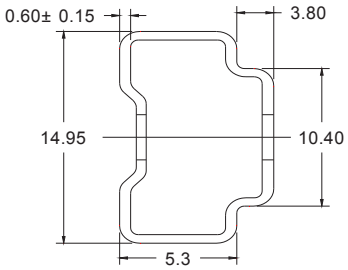

Unless otherwise stated all dimensions in mm ± 0.5mm.

Tube length:475mm ± 2.0mm Tube Quantity:35PCS

REEL OUTLINE DIMENSIONS

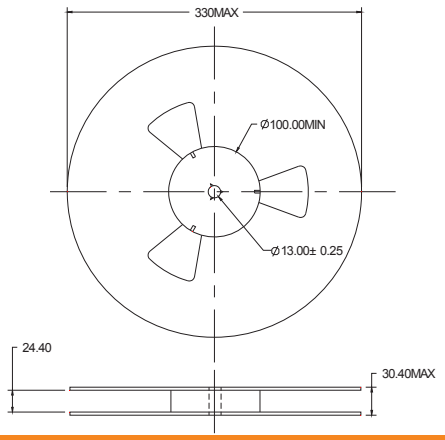

TAPE OUTLINE DIMENSIONS

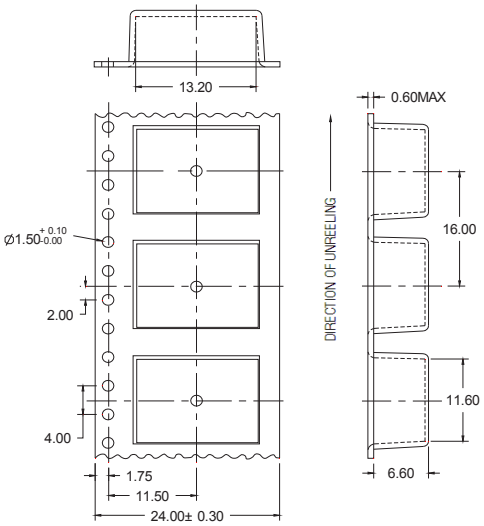

REEL PACKING DETAILS

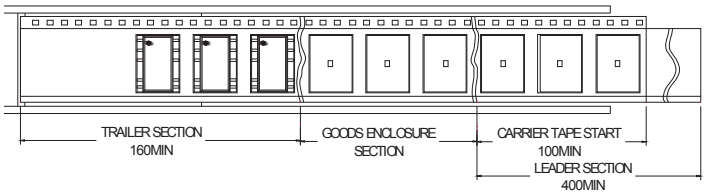

Product Orientation Pin 1 located nearest to carrier drive sprocket. **REEL Quantity: 500pcs**

V1.1/0318 • Stand 0318 • Irrtümer vorbehalten • Copyright © 2018 by HAUFE GmbH & Co. KG

INDUKTIVITÄTEN
STROMVERSORGUNGEN
BLECHBEARBEITUNG
MAGNETISCHE ABSCHIRMUNGEN

HM2 - 1W 3KVDC Isolated Single Output SMD DC/DC Converters

HAUFE®
„PRECISION FOR YOUR SUCCESS"
... since 1947

Miniature surface mounted DC/DC Converters are an ideal and economical solution for many applications where noise reduction, voltage isolation, voltage conversion in distributed power systems is required. these converters are qualified for the higher temperatures requested by lead-free reflow solder processes, especially for automated SMD production lines.

FEATURES:

- *RoHS compliant*
- *Efficiency up to 80%*
- *Single isolated output*
- *3KVDC isolation*
- *Custom solutions available*
- *Power density 1.8W/cm³*
- *UL 94V-0 package material*
- *Operating temperature: -40 to +105ºC*
- *Input voltage: 3.3V, 5V,12V,15V, 24V*
- *Output voltage: 3.3V, 5V, 9V, 12V,15V*
- *Optional: Continuous short circuit protection*

HM2-XXYYS10Z30/X/P	Nominal Input Voltage (V)	Output Voltage (V)	Output Current (Max./Min) mA	Efficiency %
HM2-0303S10Z30	3,3	3,3	303/30.3	72
HM2-0305S10Z30	3,3	5	201/20.1	77
HM2-0309S10Z30	3,3	9	111/11.1	77
HM2-0312S10Z30	3,3	12	83/8.3	77
HM2-0315S10Z30	3,3	15	67/6.7	77
HM2-0503S10Z30	5	3,3	303/30.3	74
HM2-0505S10Z30	5	5	200/20	69
HM2-0509S10Z30	5	9	111/11.1	75
HM2-0512S10Z30	5	12	84/8.4	78
HM2-0515S10Z30	5	15	66/6.6	78
HM2-1203S10Z30	12	3,3	303/30.3	74
HM2-1205S10Z30	12	5	200/20	67
HM2-1209S10Z30	12	9	111/11.1	73
HM2-1212S10Z30	12	12	83/8.3	74
HM2-1215S10Z30	12	15	66/6.6	75
HM2-1505S10Z30	15	5	201/20.1	77
HM2-1515S10Z30	15	15	66/6.6	75
HM2-2403S10Z30	24	3,3	303/30.3	74
HM2-2405S10Z30	24	5	200/20	67
HM2-2409S10Z30	24	9	111/11.1	73
HM2-2412S10Z30	24	12	83/8.3	74
HM2-2415S10Z30	24	15	66/6.6	75

Package Unit: Reel Quantity: 500 pcs

Optional: suffix "X" = has no Pin 5, 10, 12 e.g.: HM2-1212S10Z30X
Optional: suffix "P" = continuous short circuit protection, e.g.: HM2-1212S10Z30XP

The models listed above is just for standard type. If you need the special specification product, please contact our specialists: sales@haufe-power.de

The information and specifications contained in this data sheet are believed to be correct at time of publication. However, HAUFE GmbH & Co. KG accepts no responsibility for consequences arising from printing errors or inaccuracies. Specifications are subject to change without notice. No rights under any patent accompany the sale of any such product(s) or information contained herein.

V1.1/0318 • Stand 0318 • Irrtümer vorbehalten • Copyright © 2018 by HAUFE GmbH & Co. KG

BLECHBEARBEITUNG MAGNETISCHE ABSCHIRMUNGEN INDUKTIVITÄTEN STROMVERSORGUNGEN

HAUFE GmbH & Co. KG • Weilburger Str. 14 • 61250 Usingen • Tel.: +49 6081 9153-0 • info@haufe-uebertrager.de

INPUT CHARACTERISTICS (Min./Typ./Max.):	
Voltage range 3.3V input types (V):	2.9 / 3.3 / 3.6
Voltage range 5V input types (V):	4.5 / 5 / 5.5
Voltage range 12V input types (V) :	11 / 12 / 13.3
Voltage range 15V input types (V):	13.4 / 15 / 16.4
Voltage range 24V input types V):	22 / 24 / 26.6

ISOLATION CHARACTERISTICS:	
Isolation test voltage (VDC):	3000 / - / - (Tested for 1 second)
Resistance (Viso = 1000 VDC) (GΩ):	1 / - / -

ABSOLUTE MAXIMUM RATINGS:	
Short-circuit protection:	1 sec.
Lead temperature 1.5mm from case for 10 seconds:	300°C
Internal power dissipation :	610mW
Input voltage Vin:	03= 5.5V / 05=7V / 12=15V / 15=18V / 24=28V

Comment on AMS:

All specs typ. at TA-25°C, nominal input voltage and rated output current unless otherwise specified

OUTPUT CHRACTERISTICS (Min. / Typ. / Max.):	
Rated Power TA= -40°C to 85°C:	- / - / 1.0
Voltage Set Point Accuracy (%):	See tolerance envelope
Line regulation High VIN to low VIN (%):	/ 1.0 / 1.2
Load regulation:	
03XX, 0503, 1203, 2403	- / 10 / 14
0505, 1205, 2405	- / 13 / 15
0509, 1209, 2409	- / 8.0 / 9.0
0512, 1212, 2412	- / 6.5 / 7.5
0515,1215, 1515, 2415	- / 6 / 7.0

GENERAL CHARACTERISTICS (Min. / Typ. / Max.)	
Switching frequency (all output types) (kHz):	- / 120 / -

TEMPERATUR CHARACTERISTICS (Min. / Typ. / Max.)	
Derating if the temperature is ≥85°C (°C):	-40 / - / 105
Storage temperature (°C):	-55 / - / 125
Cooling:	Free air convection

TEMPERATURE DERATING GRAPHS

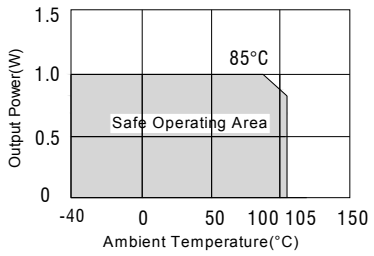

TOLERANCE ENVELOPES

3.3V output types

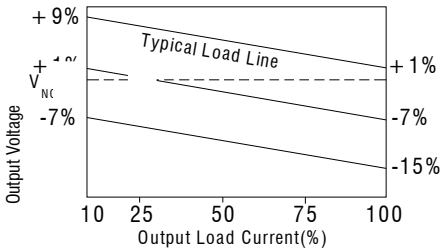

All other types

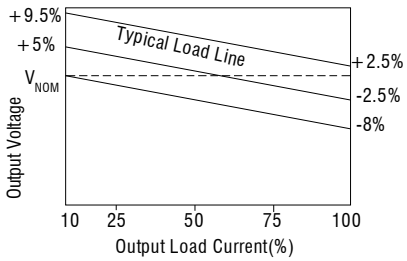

V1.1/0318 • Stand 0318 • Irrtümer vorbehalten • Copyright © 2018 by HAUFE GmbH & Co. KG

BLECHBEARBEITUNG MAGNETISCHE ABSCHIRMUNGEN INDUKTIVITÄTEN STROMVERSORGUNGEN

MECHANICAL DIMENSION

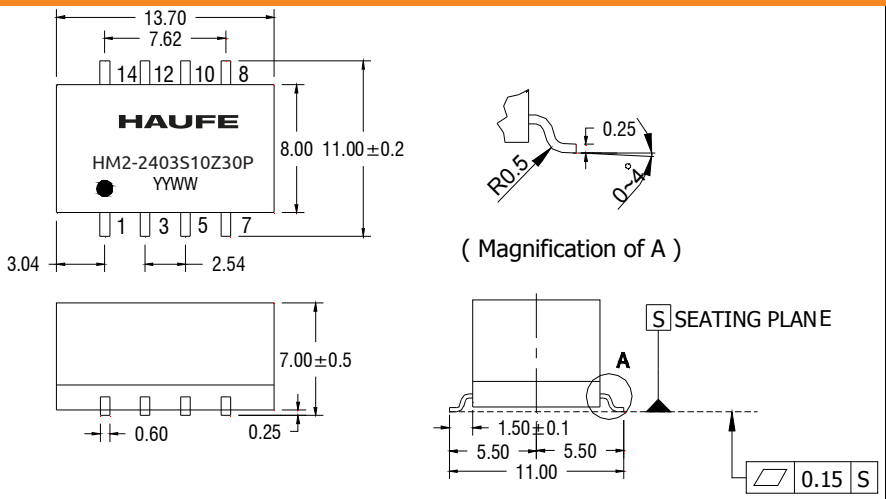

All dimensions in mm ±0.25mm. All pins on a 2.54mm pitch and within ±0.25mm of true position.
Weight: 1.21g

PIN CONNECTIONS

8 PIN SMD		
Pin	Function	Add suffix "X" function
1	-Vin	-Vin
3	+Vin	+Vin
5	NA	No Pin
7	-Vout	-Vout
8	+Vout	+Vout
10	NA	No Pin
12	NA	No Pin
14	NA	NA

NA - Not available for electrical connection.

RECOMMENDED FOOTPRINT DETAILS

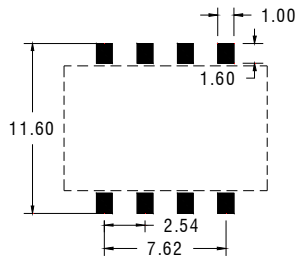

All pins on a 2.54mm pitch.

Unless otherwise stated all dimensions in mm ± 0.5mm.

TUBE OUTLINE DIMENSIONS

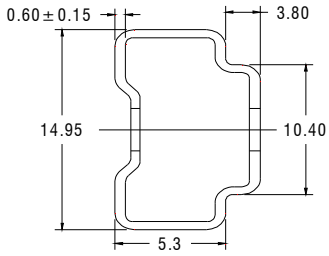

Unless otherwise stated all dimensions in mm ± 0.25mm.

Tube length:475mm ± 2.0mm Tube Quantity:35PCS

REEL OUTLINE DIMENSIONS

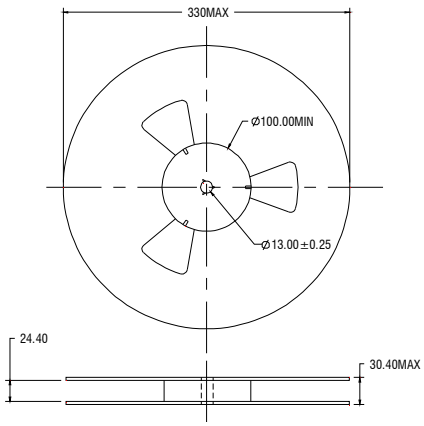

TAPE OUTLINE DIMENSIONS

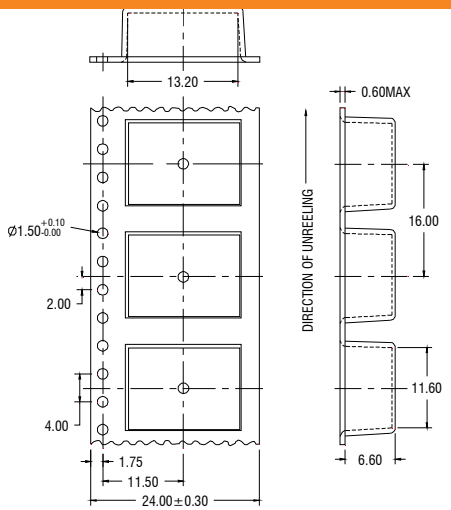

REEL PACKING DETAILS

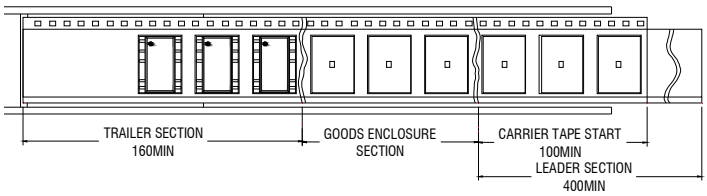

Product Orientation Pin 1 located nearest to carrier drive sprocket. **REEL Quantity: 500pcs**

V1.1/0318 • Stand 0318 • Irrtümer vorbehalten • Copyright © 2018 by HAUFE GmbH & Co. KG

INDUKTIVITÄTEN
STROMVERSORGUNGEN
BLECHBEARBEITUNG
MAGNETISCHE ABSCHIRMUNGEN

HM3 – 1W 3KVDC Isolated Single Output SMD DC/DC Converters

HAUFE®
„PRECISION FOR YOUR SUCCESS"
... since 1947

Miniature surface mounted DC/DC Converters are an ideal and economical solution for many applications where noise reduction, voltage isolation, voltage conversion in distributed power systems is required. these converters are qualified for the higher temperatures requested by lead-free reflow solder processes, especially for automated SMD production lines.

FEATURES:

- *RoHS compliant*
- *Efficiency up to 80%*
- *Operating temperature: -40 to +105°C*
- *Power density 1.36W/cm³*
- *Input voltage: 3.3V, 5V, 12V,15V,24V*
- *Output voltage: 3.3V, 5V, 9V, 12V,15V*
- *UL 94V-0 package material*
- *3KVDC isolation*
- *Custom solutions available*
- *Optional: Continuous short circuit protection*

HM3-XXYYS10Z30/X/P	Nominal Input Voltage (V)	Output Voltage (V)	Output Current (Max./ Min) (mA)	Efficiency (%)
HM3-0303S10Z30	3,3	3,3	303/30.3	70
HM3-0305S10Z30	3,3	5	201/20.1	70
HM3-0309S10Z30	3,3	9	111/11.1	72
HM3-0312S10Z30	3,3	12	83/8.3	75
HM3-0315S10Z30	3,3	15	67/6.7	80
HM3-0503S10Z30	5	3,3	303/30.3	70
HM3-0505S10Z30	5	5	201/20.1	70
HM3-0509S10Z30	5	9	111/11.1	72
HM3-0512S10Z30	5	12	83/8.3	75
HM3-0515S10Z30	5	15	67/6.7	80
HM3-1203S10Z30	12	3,3	303/30.3	70
HM3-1205S10Z30	12	5	201/20.1	70
HM3-1209S10Z30	12	9	111/11.1	66
HM3-1212S10Z30	12	12	83/8.3	75
HM3-1215S10Z30	12	15	67/6.7	80
HM3-1515S10Z30	15	15	67/6.7	80
HM3-2403S10Z30	24	3,3	303/30.3	70
HM3-2405S10Z30	24	5	201/20.1	70
HM3-2409S10Z30	24	9	111/11.1	72
HM3-2412S10Z30	24	12	83/8.3	75
HM3-2415S10Z30	24	15	67/6.7	80

Optional: suffix "X" = has no Pin 5, 10, 12 e.g.: HM3-1212S10Z30X
Optional: suffix "P" = continuous short circuit protection, e.g.: HM3-1212S10Z30XP

The models listed above is just for standard type. If you need the special specification product, please contact our specialists: sales@haufe-power.de

TEMPERATURE DERATING GRAPHS

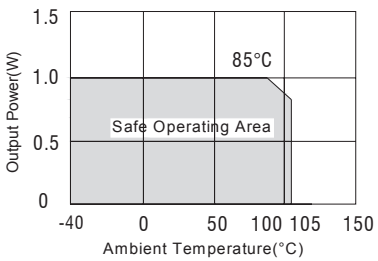

TOLERANCE ENVELOPES

Tolerance Envelope 3.3V output types

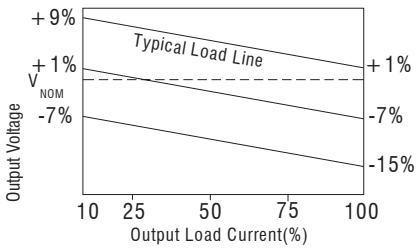

All other types

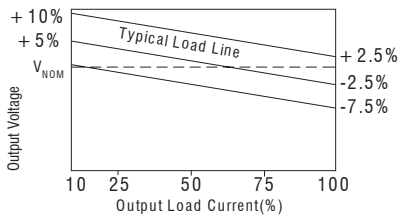

The information and specifications contained in this data sheet are believed to be correct at time of publication. However, HAUFE GmbH & Co. KG accepts no responsibility for consequences arising from printing errors or inaccuracies. Specifications are subject to change without notice. No rights under any patent accompany the sale of any such product(s) or information contained herein.

V1.1/0318 • Stand 0318 • Irrtümer vorbehalten • Copyright © 2018 by HAUFE GmbH & Co. KG

INDUKTIVITÄTEN STROMVERSORGUNGEN
BLECHBEARBEITUNG MAGNETISCHE ABSCHIRMUNGEN

HAUFE GmbH & Co. KG • Weilburger Str. 14 • 61250 Usingen • Tel.: +49 6081 9153-0 • info@haufe-uebertrager.de

INPUT CHARACTERISTICS (Min./Typ./Max.):	
Voltage range 3.3V input types (V):	2.9 / 3.3 / 3.6
Voltage range 5V input types (V):	4.5 / 5 / 5.5
Voltage range 12V input types (V) :	11 / 12 / 13.3
Voltage range 15V input types (V):	13.4 / 15 / 16.4
Voltage range 24V input types V):	22 / 24 / 26.6
Reflected ripple current (mA p-p):	- / 40 / 50

ISOLATION CHARACTERISTICS:	
Isolation test voltage (VDC):	3000 / - / - (Tested for 1 second)
Resistance (Viso = 1000 VDC) (GΩ):	1 / - / -

ABSOLUTE MAXIMUM RATINGS:	
Short-circuit protection:	1 sec.
Lead temperature 1.5mm from case for 10 seconds:	300°C
Internal power dissipation :	680mW
Input voltage Vin:	03= 5.5V / 05=7V / 12=15V / 15=18V / 24=28V

Comment on AMS:

All specs typ. at TA-25°C, nominal input voltage and rated output current unless otherwise specified

OUTPUT CHRACTERISTICS (Min. / Typ. / Max.):	
Rated Power TA= -40°C to 85°C:	- / - / 1.0
Voltage Set Point Accuracy (%):	See tolerance envelope
Line regulation High VIN to low VIN (%):	/ 1.0 / 1.2
6Load regulation:	
Load Regulation *** 0303, 0503	- / 9 / -
Load Regulation *** 0309	- / 9 / -
Load Regulation *** 0509, 1209, 2409	- / 7 / -
Load Regulation *** 0312, 0315	- / 12 / -
Load Regulation *** 0512, 1212, 2412	- / 7 / -
Load Regulation *** 0515, 1215, 1515, 2415	- / 7 / -
Load Regulation *** 5V output types (%):	- / 9 / -
*(*** = 10% load to rated load)*	

GENERAL CHARACTERISTICS (Min. / Typ. / Max.)	
Switching frequency 0312, 0315 (kHz)	- / 110 / -
Switching frequency 0303, 0305, 0503 (kHz)	- / 115 / -
Switching frequency all other variants (kHz)	- / 120 / -

TEMPERATUR CHARACTERISTICS (Min. / Typ. / Max.)	
Derating if the temperature is ≥85°C (°C):	-40 / - / 105
Storage temperature (°C):	-55 / - / 125
Cooling:	Free air convection

V1.1/0318 • Stand 0318 • Irrtümer vorbehalten • Copyright © 2018 by HAUFE GmbH & Co. KG

BLECHBEARBEITUNG MAGNETISCHE ABSCHIRMUNGEN INDUKTIVITÄTEN STROMVERSORGUNGEN

PIN CONNECTIONS

10 PIN SMD		
Pin	Function	Add suffix "X" function
1	-Vin	-Vin
3	+Vin	+Vin
5	NA	No Pin
7	OV	OV
9	NA	NA
10	NA	No Pin
12	+Vout	+Vout
14	NA	No Pin
16	NA	No Pin
18	NA	NA

NA - Not available for electrical connection.

MECHANICAL DIMENSION

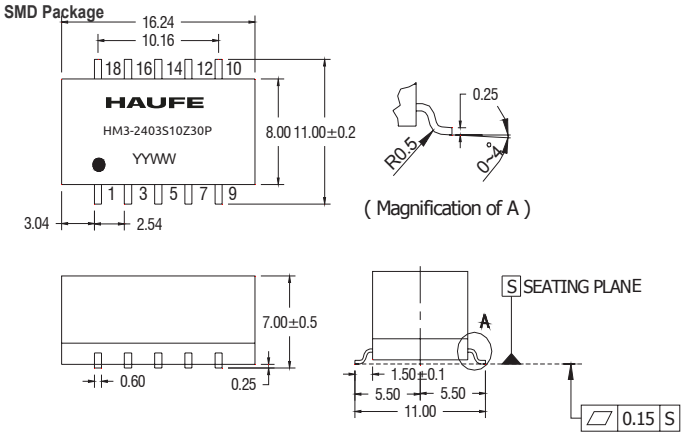

All dimensions in mm ±0.25mm. All pins on a 2.54 pitch. Weight: 1.53g

RECOMMENDED FOOTPRINT DETAILS

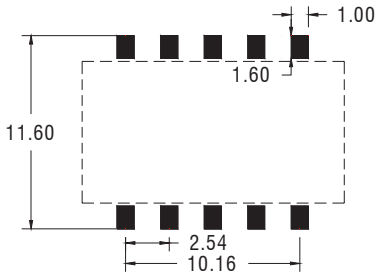

TUBE OUTLINE DIMENSIONS

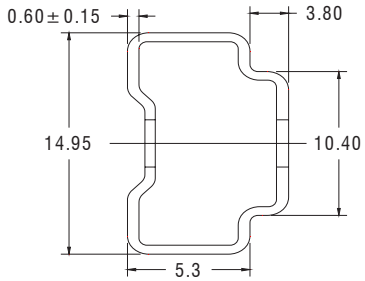

Unless otherwise stated all dimensions in mm±0.5mm.

Tube length: 475mm±2.0mm Tube Quantity: 25PCS

REEL OUTLINE DIMENSIONS

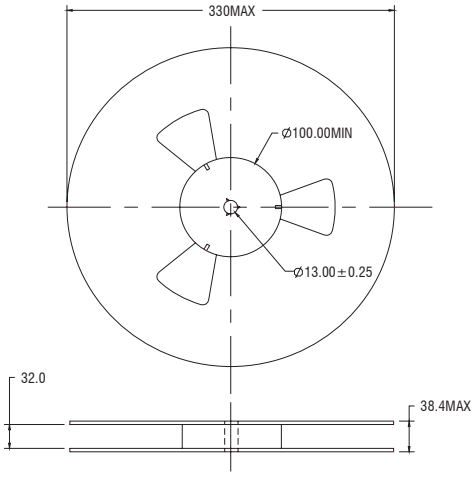

TAPE OUTLINE DIMENSIONS

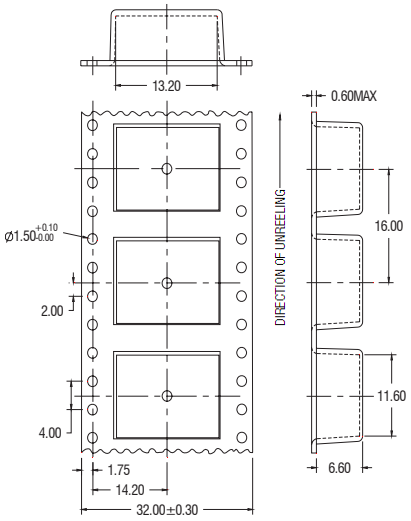

REEL PACKING DETAILS

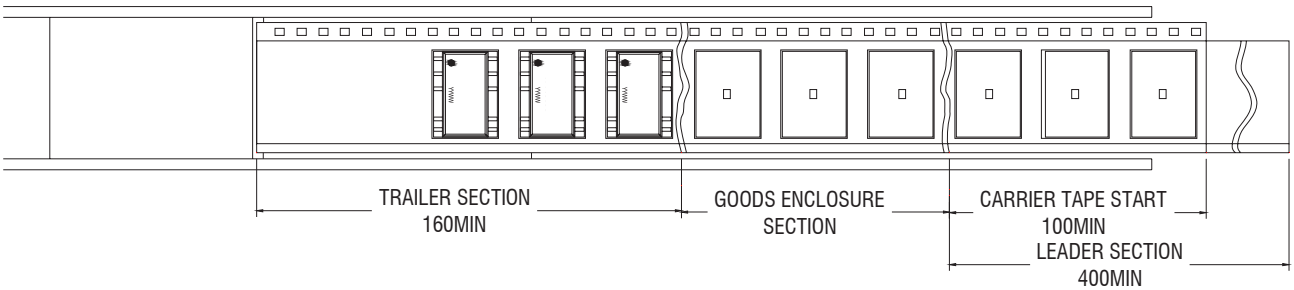

Product Orientation

Pin 1, located nearest to carrier drive sprocket

Reel quantity : 500 PCS

V1.1/0318 • Stand 0318 • Irrtümer vorbehalten • Copyright © 2018 by HAUFE GmbH & Co. KG

INDUKTIVITÄTEN
STROMVERSORGUNGEN
BLECHBEARBEITUNG
MAGNETISCHE ABSCHIRMUNGEN

Miniature surface mounted DC/DC Converters are an ideal and economical solution for many applications where noise reduction, voltage isolation, voltage conversion in distributed power systems is required. These converters are qualified for the higher temperatures requested by lead-free reflow solder processes, especially for automated SMD production lines.

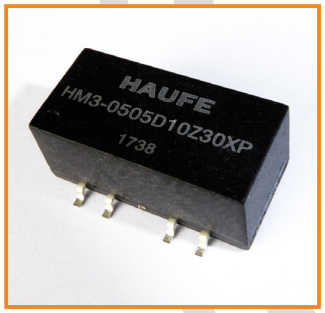

FEATURES:

- *RoHS compliant*
- *Efficiency up to 78%*
- *Operating temperature: -40 to 105 °C*
- *Input voltage: 3.3V, 5V, 12V,15V,24V*
- *Output voltage: ±3.3V, ±5V, ±9V, ±12V,±15V*
- *UL 94V-0 package material*
- *3KVDC isolation*
- *Custom solutions available*
- *Optional: Continuous short circuit protection*

HM3-XXYYD10Z30/X/P	Nominal Input Voltage (V)	Output Voltage (V)	Output Current (Max./Min) (mA)	Efficiency %
HM3-0303D10Z30	3,3	±3.3	±152/±15.2	70
HM3-0305D10Z30	3,3	±5	±100/±10	70
HM3-0309D10Z30	3,3	±9	±55/±5.5	72
HM3-0312D10Z30	3,3	±12	±42/±4.2	75
HM3-0315D10Z30	3,3	±15	±33/±3.3	80
HM3-0503D10Z30	5	±3.3	±152/±15.2	70
HM3-0505D10Z30	5	±5	±100/±10	70
HM3-0509D10Z30	5	±9	±55/±5.5	72
HM3-0512D10Z30	5	±12	±42/±4.2	75
HM3-0515D10Z30	5	±15	±33/±3.3	80
HM3-1203D10Z30	12	±3.3	±152/±15.2	70
HM3-1205D10Z30	12	±5	±100/±10	70
HM3-1209D10Z30	12	±9	±55/±5.5	26
HM3-1212D10Z30	12	±12	±42/±4.2	75
HM3-1215D10Z30	12	±15	±33/±3.3	80
HM3-1515D10Z30	15	±15	±33/±3.3	80
HM3-2403D10Z30***	24	±3.3	±152/±15.2	70
HM3-2405D10Z30***	24	±5	±100/±10	70
HM3-2409D10Z30***	24	±9	±55/±5.5	72
HM3-2412D10Z30***	24	±12	±42/±4.2	75
HM3-2415D10Z30***	24	±15	±33/±3.3	80

Package Unit: 35

Optional: suffix "X" = has no Pin 5, 10, 12 e.g.: HM3-1212D10Z30X
Optional: suffix "P" = continuous short circuit protection, e.g.: HM3-1212D10Z30XP
*** available soon
The models listed above is just for standard type. If you need the special specification product, please contact our specialists: sales@haufe-power.de

The information and specifications contained in this data sheet are believed to be correct at time of publication. However, HAUFE GmbH & Co. KG accepts no responsibility for consequences arising from printing errors or inaccuracies. Specifications are subject to change without notice. No rights under any patent accompany the sale of any such product(s) or information contained herein.

V1.1/0318 • Stand 0318 • Irrtümer vorbehalten • Copyright © 2018 by HAUFE GmbH & Co. KG

BLECHBEARBEITUNG MAGNETISCHE ABSCHIRMUNGEN INDUKTIVITÄTEN STROMVERSORGUNGEN

INPUT CHARACTERISTICS (Min./Typ./Max.):	
Voltage range 3.3V input types (V):	2.9 / 3.3 / 3.6
Voltage range 5V input types (V):	4.5 / 5 / 5.5
Voltage range 12V input types (V) :	11 / 12 / 13.3
Voltage range 15V input types (V):	13.4 / 15 / 16.4
Voltage range 24V input types V):	22 / 24 / 26.6
Reflected ripple current (mA p-p):	- / 40 / 50

ISOLATION CHARACTERISTICS:	
Isolation test voltage (VDC):	3000 / - / - (Tested for 1 second)
Resistance (Viso = 1000 VDC) (GΩ):	1 / - / -

ABSOLUTE MAXIMUM RATINGS:	
Short-circuit protection:	1 sec.
Lead temperature 1.5mm from case for 10 seconds:	300°C
Internal power dissipation :	680mW
Input voltage Vin:	03= 5.5V / 05=7V / 12=15V / 15=18V / 24=28V

Comment on AMS:

All specs typ. at TA-25°C, nominal input voltage and rated output current unless otherwise specified

OUTPUT CHRACTERISTICS (Min. / Typ. / Max.):	
Rated Power TA= -40°C to 85°C (W):	- / - / 1.1
Voltage Set Point Accuracy (%):	See tolerance envelope
Line regulation High VIN to low VIN (%%):	/ 1.0 / 1.2
Load Regulation *** 0303, 0503	- / 9 / -
Load Regulation *** 0309	- / 9 / -
Load Regulation *** 0509, 1209, 2409	- / 7 / -
Load Regulation *** 0312, 0315	- / 12 / -
Load Regulation *** 0512, 1212, 2412	- / 7 / -
Load Regulation *** 0515, 1215, 1515, 2415	- / 7 / -
Load Regulation *** 5V output types (%):	- / 9 / -

*(*** = 10% load to rated load)*

GENERAL CHARACTERISTICS (Min. / Typ. / Max.)	
Switching frequency 0312, 0315 (kHz)	- / 110 / -
Switching frequency 0303, 0305, 0503 (kHz)	- / 115 / -
Switching frequency all other variants (kHz)	- / 120 / -

TEMPERATUR CHARACTERISTICS (Min. / Typ. / Max.)	
Derating if the temperature is ≥85°C (°C):	-40 / - / 105
Storage temperature (°C):	-55 / - / 125
Cooling:	Free air convection

TEMPERATURE DERATING GRAPHS

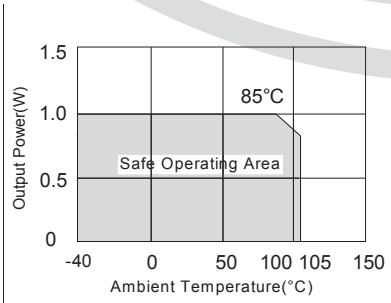

TOLERANCE ENVELOPES

Tolerance Envelope 3.3V output types

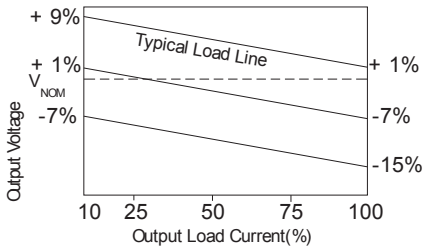

All other types

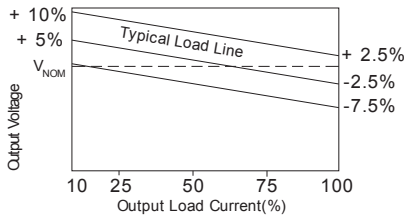

V1.1/0318 • Stand 0318 • Irrtümer vorbehalten • Copyright © 2018 by HAUFE GmbH & Co. KG

INDUKTIVITÄTEN
STROMVERSORGUNGEN
BLECHBEARBEITUNG
MAGNETISCHE ABSCHIRMUNGEN

PIN CONNECTIONS

10 PIN SMD		
Pin	Function	Add suffix "X" function
1	-Vin	-Vin
3	+Vin	+Vin
5	NA	No Pin
7	OV	OV
9	-Vout	-Vout
10	NA	No Pin
12	+Vout	+Vout
14	NA	No Pin
16	NA	No Pin
18	NA	NA

NA - Not available for electrical connection.

MECHANICAL DIMENSION

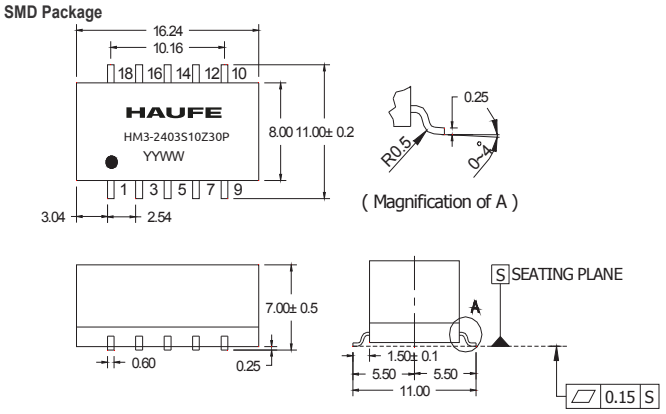

All dimensions in mm ±0.25mm. All pins on a 2.54 pitch. Weight: 1.53g

RECOMMENDED FOOTPRINT DETAILS

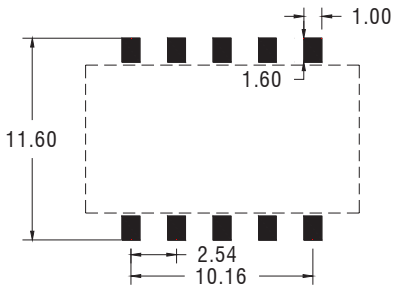

TUBE OUTLINE DIMENSIONS

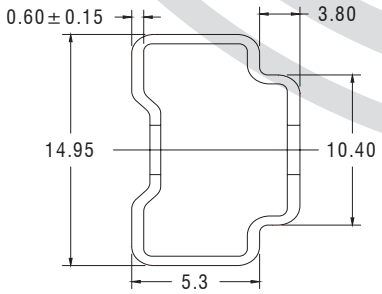

Unless otherwise stated all dimensions in mm±0.5mm.

Tube length: 475mm±2.0mm Tube Quantity: 25PCS

REEL OUTLINE DIMENSIONS

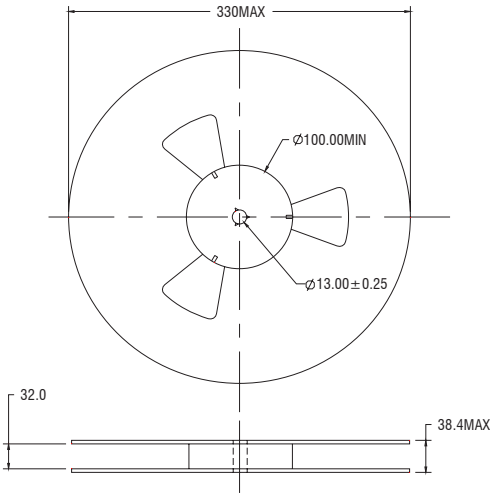

TAPE OUTLINE DIMENSIONS

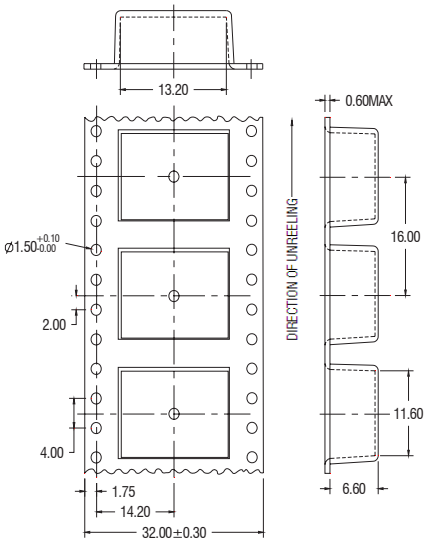

REEL PACKING DETAILS

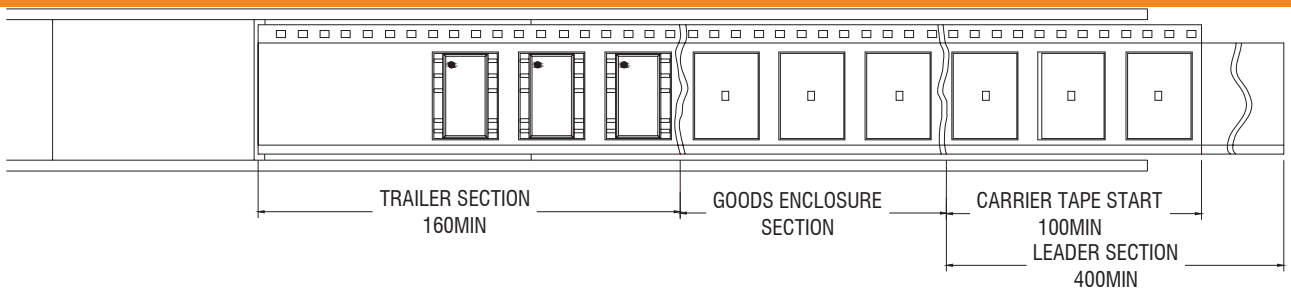

Product Orientation

Pin 1, located nearest to carrier drive sprocket

Reel quantity : 500 PCS

V1.1/0318 • Stand 0318 • Irrtümer vorbehalten • Copyright © 2018 by HAUFE GmbH & Co. KG

BLECHBEARBEITUNG
MAGNETISCHE ABSCHIRMUNGEN
INDUKTIVITÄTEN
STROMVERSORGUNGEN

Miniature surface mounted DC/DC Converters are an ideal and economical solution for many applications where noise reduction, voltage isolation, voltage conversion in distributed power systems is required. these converters are qualified for the higher temperatures requested by lead-free reflow solder processes, especially for automated SMD production lines.

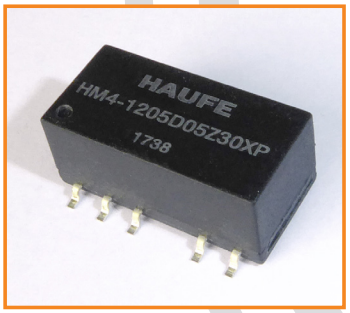

FEATURES:

- *RoHS compliant*
- *Efficiency up to 82%*
- *Operating temperature: -40 to +105ºC*
- *Input voltage: 3.3V, 5V, 12V, 24V*
- *Output voltage: ±5V, ±9V, ±12V,±15V / 3.3V, 5V, 9V, 12V, 15V*
- *UL 94V-0 package material*
- *3KVDC isolation*
- *Custom solutions available*
- *Optional: Continuous short circuit protection*

HM4-XXYYD10Z30P/X/P	Nominal Input Voltage (V)	Output Voltage (V)	Output Current (Max./Min) (mA)	Efficiency(%)
HM4-0503D10Z30	5	±3.3	±75.7/±7.57	70
HM4-0505D10Z30	5	±5	±50/±5.0	70
HM4-0509D10Z30	5	±9	±27.7/±2.77	78
HM4-0512D10Z30	5	±12	±20.8/±2.08	79
HM4-0515D10Z30	5	±15	±16.6/±1.66	80
HM4-1205D10Z30	12	±5	±50/±5.0	72
HM4-1209D10Z30	12	±9	±27.7/±2.77	79
HM4-1212D10Z30	12	±12	±20.8/±2.08	81
HM4-1215D10Z30	12	±15	±16.6/±1.66	82
HM4-2405D10Z30***	24	±5	±50/±5.0	72
HM4-2409D10Z30***	24	±9	±27.7/±2.77	79
HM4-2412D10Z30***	24	±12	±20.8/±2.08	81
HM4-2415D10Z30***	24	±15	±16.6/±1.66	82
HM4-0303S10Z30	3,3	3,3	151.5/15.15	73
HM4-0305S10Z30	3,3	5	100/10	75
HM4-0505S10Z30	5	5	100/10	70
HM4-0509S10Z30	5	9	55.5/5.55	78
HM4-0512S10Z30	5	12	41.6/4.16	79
HM4-0515S10Z30	5	15	31.2/3.12	80
HM4-1203S10Z30	12	3,3	151.5/15.15	70
HM4-1205S10Z30	12	5	100/10	72
HM4-1209S10Z30	12	9	55.5/5.55	79
HM4-1212S10Z30	12	12	41.6/4.16	81
HM4-1215S10Z30	12	15	31.2/3.12	82
HM4-2405S10Z30***	24	5	100/10	72
HM4-2409S10Z30***	24	9	55.5/5.55	79
HM4-2412S10Z30***	24	12	41.6/4.16	81
HM4-2415S10Z30***	24	15	31.2/3.12	82

Optional: suffix "X" = has no Pin 5, 10, 12 e.g.: HM4-1212D10Z30X
Optional: suffix "P" = continuous short circuit protection, e.g.: HM4-1212D10Z30XP
*** available soon

Package Unit: Reel Quantity: 500 pcs.
Less than 500pcs will be tube package

The models listed above is just for standard type. If you need the special specification product, please contact our specialists: sales@haufe-power.de

The information and specifications contained in this data sheet are believed to be correct at time of publication. However, HAUFE GmbH & Co. KG accepts no responsibility for consequences arising from printing errors or inaccuracies. Specifications are subject to change without notice. No rights under any patent accompany the sale of any such product(s) or information contained herein.

V1.1/0318 • Stand 0318 • Irrtümer vorbehalten • Copyright © 2018 by HAUFE GmbH & Co. KG

BLECHBEARBEITUNG MAGNETISCHE ABSCHIRMUNGEN INDUKTIVITÄTEN STROMVERSORGUNGEN

INPUT CHARACTERISTICS (Min./Typ./Max.):	
Voltage range 3.3V input types (V):	2.9 / 3.3 / 3.6
Voltage range 5V input types (V):	4.5 / 5 / 5.5
Voltage range 12V input types (V) :	11 / 12 / 13.3
Voltage range 24V input types V):	22 / 24 / 26.6

ISOLATION CHARACTERISTICS:	
Isolation test voltage (VDC):	3000 / - / - (Tested for 1 second)
Resistance (Viso = 1000 VDC) (GΩ):	1 / - / -

ABSOLUTE MAXIMUM RATINGS:	
Short-circuit protection:	1 sec.
Lead temperature 1.5mm from case for 10 seconds:	300°C
Internal power dissipation :	560mW
Input voltage Vin:	03= 5.5V / 05=7V /
	12=15V / 24=28V

OUTPUT CHRACTERISTICS (Min. / Typ. / Max.):	
Rated Power TA= -40°C to 85°C (W):	- / - / 1.0
Voltage Set Point Accuracy (%):	See tolerance envelope
Line regulation High VIN to low VIN (%%):	/ 1.0 / 1.2
Load Regulation *** 3.3V output types (%):	- / 10 / 12
Load Regulation *** 5V output types (%):	- / 10 / 12
Load Regulation *** 9V output (%):	- / 6.5 / 8.0
Load Regulation *** 12V output (%):	- / 7 / 9
Load Regulation *** 15V output (%):	- / 6.5 / 7.5
*(*** = 10% load to rated load)*	

GENERAL CHARACTERISTICS (Min. / Typ. / Max.)	
Switching frequency 3.3V input (kHz):	- /120 / -
Switching frequency 5V input (kHz):	- /120 / -
Switching frequency 12V + 24V input (kHz):	- /130 / -

TEMPERATUR CHARACTERISTICS (Min. / Typ. / Max.)	
Derating if the temperature is ≥85°C (°C):	-40 / - / 105
Storage temperature (°C):	-55 / - / 125
Cooling:	Free air convection

TEMPERATURE DERATING GRAPHS

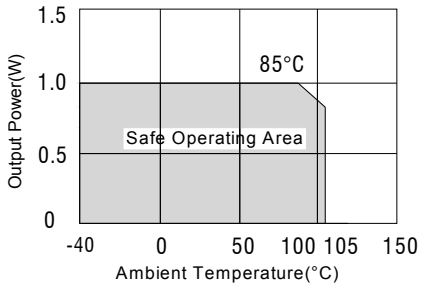

TOLERANCE ENVELOPES

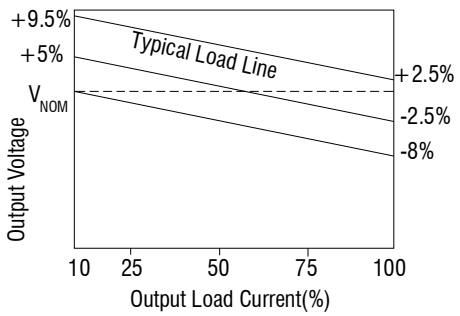

RoHS COMPLIANCE INFORMATION: This series is compatible with RoHS soldering systems with a peak reflow solder temperature of 245° C and time above liquids of 217° C for 80 seconds. These series are backward compatible with Sn/Pb soldering systems.

V1.1/0318 • Stand 0318 • Irrtümer vorbehalten • Copyright © 2018 by HAUFE GmbH & Co. KG

BLECHBEARBEITUNG MAGNETISCHE ABSCHIRMUNGEN INDUKTIVITÄTEN STROMVERSORGUNGEN

MECHANICAL DIMENSION

SMD Package

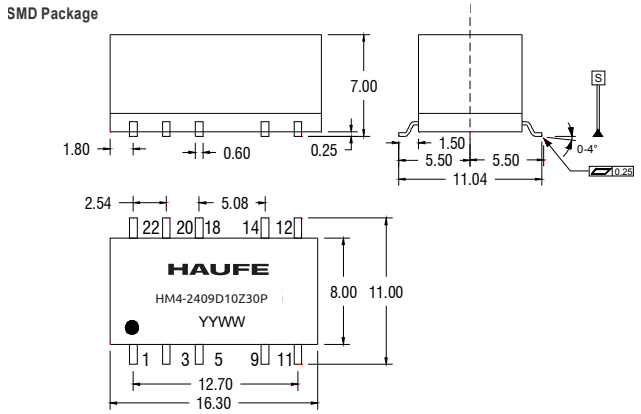

All dimensions in mm ±0.25mm. All pins on a 2.54mm pitch. Weight: 1.53g

PIN CONNECTIONS

10 PIN SMD		
Pin	Dual Output	Single Output
1	-Vin	-Vin
3	+Vin	+Vin
5	NA	NA
9	OV	OV
11	-Vout	NA
12	NA	NA
14	+Vout	+Vout
18	NA	NA
20	NA	NA
22	NA	NA

REEL OUTLINE DIMENSIONS

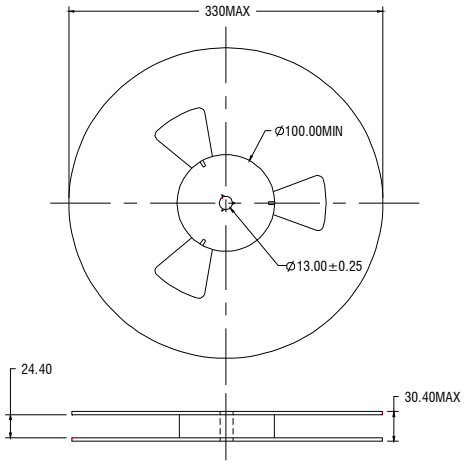

TAPE OUTLINE DIMENSIONS

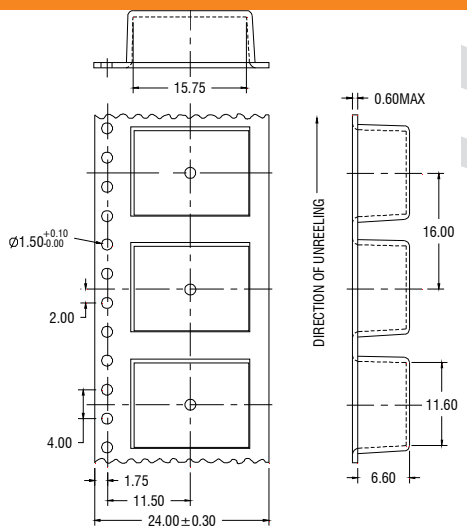

RECOMMENDED FOOTPRINT DETAILS

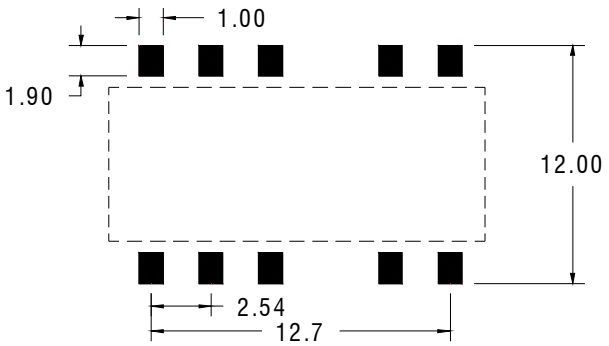

TUBE OUTLINE DIMENSIONS

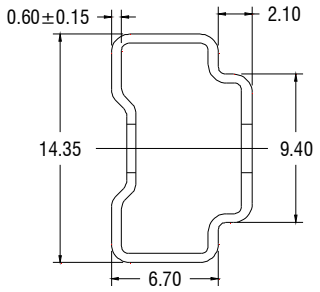

Unless otherwise stated all dimensions in mm±0.5mm.

Tube length:475mm±2.0mm Tube Quantity:25PCS

REEL PACKING DETAILS

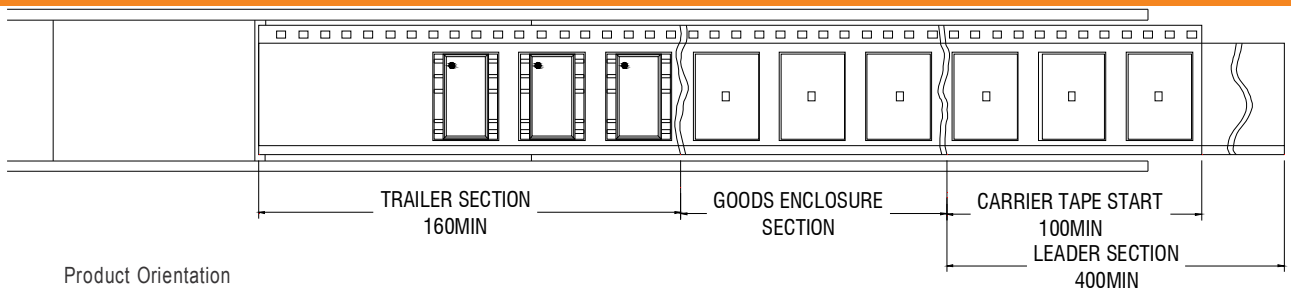

Product Orientation

Pin 1, located nearest to carrier drive sprocket

Reel Quantity : 500PCS
Less than 500pcs will be tube package

V1.1/0318 • Stand 0318 • Irrtümer vorbehalten • Copyright © 2018 by HAUFE GmbH & Co. KG

INDUKTIVITÄTEN
STROMVERSORGUNGEN
BLECHBEARBEITUNG
MAGNETISCHE ABSCHIRMUNGEN

Miniature surface mounted DC/DC Converters are an ideal and economical solution for many applications where noise reduction, voltage isolation, voltage conversion in distributed power systems is required. these converters are qualified for the higher temperatures requested by lead-free reflow solder processes, especially for automated SMD production lines.

FEATURES:

- *RoHS compliant*
- *Efficiency up to 82%*
- *Operating temperature: -40 to +105ºC*
- *Input voltage: 3.3V, 5V, 12V, 24V*
- *Output voltage: ±5V,±9V,±12V,±15V / 3.3V,5V,9V,12V,15V*
- *UL 94V-0 package material*
- *3KVDC isolation (1 minute)*
- *Dual isolated output*
- *Plastic encapsulated*
- *Custom solutions available*
- *Optional: Continuous short circuit protection*

HM5-XXYYD10Z30/X/P	Nominal Input Voltage (V)	Output Voltage (V)	Output Current (Max./Min) (mA)	Efficiency (%)
HM5-0503D10Z30	5	±3.3	±152/±15.2	70
HM5-0505D10Z30	5	±5	±100/±10	70
HM5-0509D10Z30	5	±9	±55/±5.5	78
HM5-0512D10Z30	5	±12	±42/±4.2	79
HM5-0515D10Z30	5	±15	±33/±3.3	80
HM5-1205D10Z30	12	±5	±100/±10	72
HM5-1209D10Z30	12	±9	±55/±5.5	79
HM5-1212D10Z30	12	±12	±42/±4.2	81
HM5-1215D10Z30	12	±15	±33/±3.3	82
HM5-2405D10Z30***	24	±5	±100/±10	72
HM5-2409D10Z30***	24	±9	±55/±5.5	79
HM5-2412D10Z30***	24	±12	±42/±4.2	81
HM5-2415D10Z30***	24	±15	±33/±3.3	82
HM5-0303S10Z30	3,3	3,3	304/30.4	73
HM5-0305S10Z30	3,3	5	200/20	75
HM5-0505S10Z30	5	5	200/20	70
HM5-0509S10Z30	5	9	111/11.1	78
HM5-0512S10Z30	5	12	84/8.4	79
HM5-0515S10Z30	5	15	66/6.6	80
HM5-1203S10Z30	12	3,3	303/30.3	76
HM5-1205S10Z30	12	5	200/20	72
HM5-1209S10Z30	12	9	111/11.1	79
HM5-1212S10Z30	12	12	84/8.4	81
HM5-1215S10Z30	12	15	66/6.6	82
HM5-2405S10Z30***	24	5	200/20	72
HM5-2409S10Z30***	24	9	111/11.1	79
HM5-2412S10Z30***	24	12	84/8.4	81
HM5-2415S10Z30***	24	15	66/6.6	82

Optional: suffix "X" = has no Pin 5, 10, 12 e.g.: HM5-1212D10Z30X
Optional: suffix "P" = continuous short circuit protection, e.g.: HM5-1212D10Z30XP
*** available soon

The models listed above is just for standard type. If you need the special specification product, please contact our specialists: sales@haufe-power.de

The information and specifications contained in this data sheet are believed to be correct at time of publication. However, HAUFE GmbH & Co. KG accepts no responsibility for consequences arising from printing errors or inaccuracies. Specifications are subject to change without notice. No rights under any patent accompany the sale of any such product(s) or information contained herein.

V1.1/0318 • Stand 0318 • Irrtümer vorbehalten • Copyright © 2018 by HAUFE GmbH & Co. KG

BLECHBEARBEITUNG MAGNETISCHE ABSCHIRMUNGEN INDUKTIVITÄTEN STROMVERSORGUNGEN

INPUT CHARACTERISTICS (Min./Typ./Max.):	
Voltage range 3.3V input types (V):	2.9 / 3.3 / 3.6
Voltage range 5V input types (V):	4.5 / 5 / 5.5
Voltage range 12V input types (V) :	11 / 12 / 13.3
Voltage range 24V input types V):	22 / 24 / 26.5

ISOLATION CHARACTERISTICS:	
Isolation test voltage (VDC):	3000 / - / - (Tested for 1 minute)
Resistance (Viso = 1000 VDC) (GΩ):	1 / - / -

ABSOLUTE MAXIMUM RATINGS:	
Short-circuit protection:	1 sec.
Lead temperature 1.5mm from case for 10 seconds:	300°C
Internal power dissipation :	560mW
Input voltage Vin:	03= 5.5V / 05=7V /
	12=15V / 24=28V

OUTPUT CHRACTERISTICS (Min. / Typ. / Max.):	
Rated Power TA= -40°C to 85°C (W):	- / - / 1.0
Voltage Set Point Accuracy (%):	See tolerance envelope
Line regulation High VIN to low VIN (%):	/ 1.0 / 1.2
Load Regulation *** 3.3V output types (%):	- / 10 / 12
Load Regulation *** 5V output types (%):	- / 10 / 12
Load Regulation *** 9V output (%):	- / 6.5 / 8.0
Load Regulation *** 12V output (%):	- / 7 / 9
Load Regulation *** 24V output (%):	- / 6.5 / 7.5
*(*** = 10% load to rated load)*	

GENERAL CHARACTERISTICS (Min. / Typ. / Max.)	
Switching frequency 3.3V input (kHz):	- /120 / -
Switching frequency 5V input (kHz):	- /120 / -
Switching frequency 12V input (kHz):	- /130 / -
Switching frequency 15V input (kHz):	- /130 / -

TEMPERATUR CHARACTERISTICS (Min. / Typ. / Max.)	
Derating if the temperature is ≥85°C (°C):	-40 / - / 105
Storage temperature (°C):	-55 / - / 125
Cooling:	Free air convection

TEMPERATURE DERATING GRAPHS

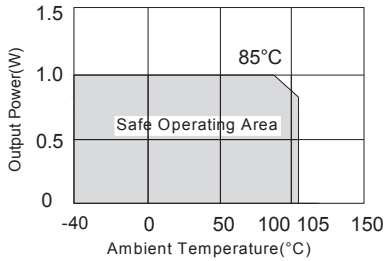

TOLERANCE ENVELOPES

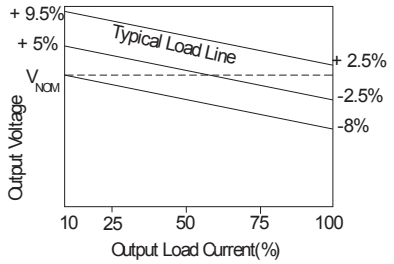

V1.1/0318 • Stand 0318 • Irrtümer vorbehalten • Copyright © 2018 by HAUFE GmbH & Co. KG

BLECHBEARBEITUNG
MAGNETISCHE ABSCHIRMUNGEN
INDUKTIVITÄTEN
STROMVERSORGUNGEN

MECHANICAL DIMENSION

SMD Package

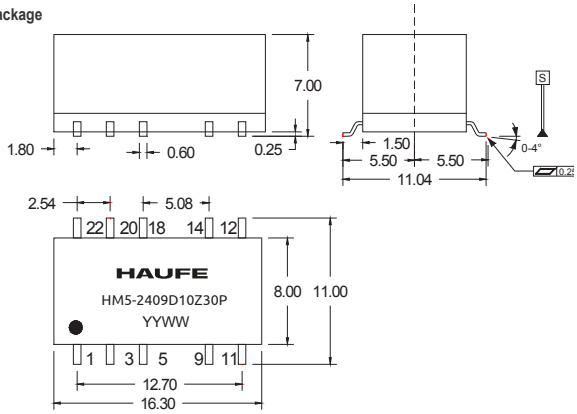

All dimensions in mm ±0.25mm. All pins on a 2.54mm pitch. Weight: 1.53g

PIN CONNECTIONS

10 PIN SMD		
Pin	Dual Output	Single Output
1	-Vin	-Vin
3	+Vin	+Vin
5	NA	NA
9	OV	OV
11	-Vout	NA
12	NA	NA
14	+Vout	+Vout
18	NA	NA
20	NA	NA
22	NA	NA

NA - Not available for electrical connection.

RECOMMENDED FOOTPRINT DETAILS

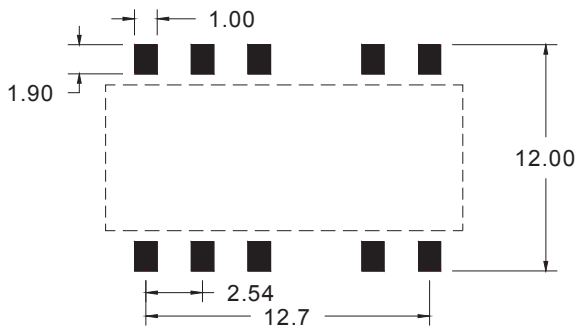

TUBE OUTLINE DIMENSIONS

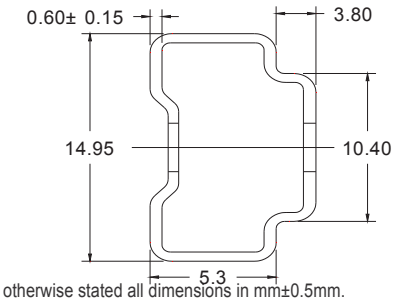

Unless otherwise stated all dimensions in mm±0.5mm.

Tube length:475mm±2.0mm Tube Quantity:25PCS

REEL OUTLINE DIMENSIONS

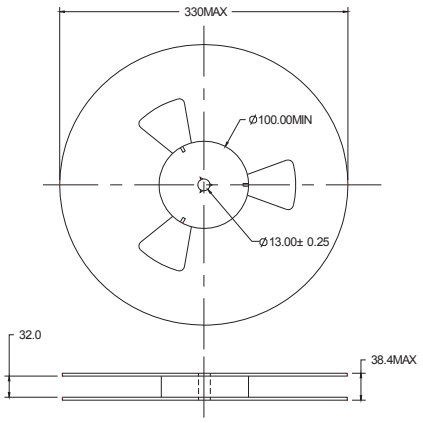

TAPE OUTLINE DIMENSIONS

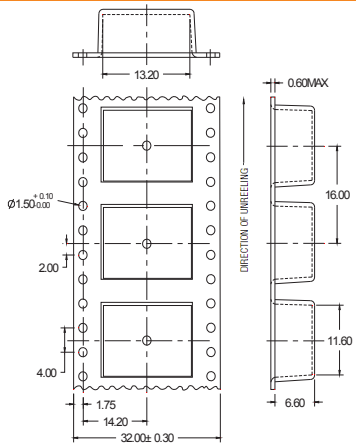

REEL PACKING DETAILS

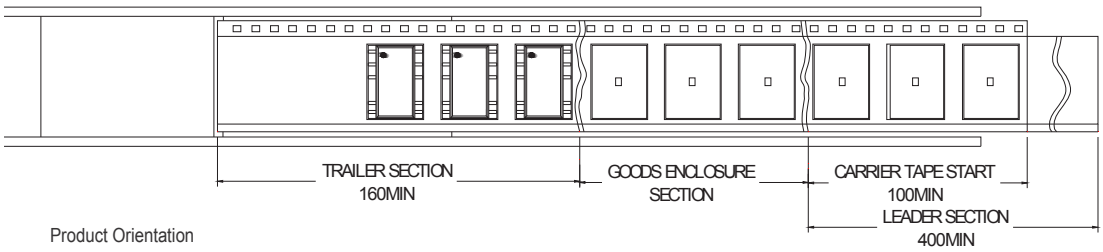

Product Orientation

Pin 1, located nearest to carrier drive sprocket

Reel Quantity : 500PCS

RoHS COMPLIANCE INFORMATION: This series is compatible with RoHS soldering systems with a peak reflow solder temperature of 245° C and time above liquids of 217° C for 80 seconds. These series are backward compatible with Sn/Pb soldering systems.

V1.1/0318 • Stand 0318 • Irrtümer vorbehalten • Copyright © 2018 by HAUFE GmbH & Co. KG

INDUKTIVITÄTEN
STROMVERSORGUNGEN
BLECHBEARBEITUNG
MAGNETISCHE ABSCHIRMUNGEN

HD1 - 0.5W 1.5KVDC Isolated Single Output DC/DC Converters

HAUFE®
„PRECISION FOR YOUR SUCCESS"
... since 1947

The HD1-XXYYS05Z15/P series are miniature, isolated low power and high efficiency DC/DC converters in a DIP package. They offer the ideal solution in many space critical applications for board level power distribution. The internal SMD construction makes it possible to offer a product with high performance at low cost. The series offers smaller size, improved efficiency, lower output ripple noise and 1.5KVDC isolation. Operating temperature -40 °C to +105 °C.

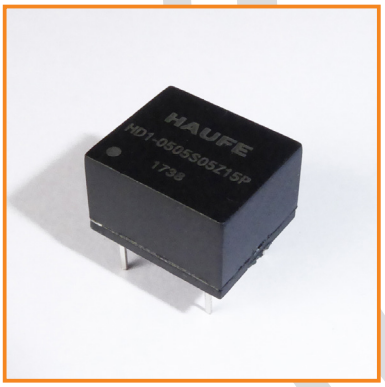

FEATURES:

- *RoHS compliant*
- *Single output rail*
- *1.5KVDC isolation*
- *High efficiency for low power applications*
- *DIP package styles*
- *Power density 0.36W/cm³*
- *UL 94V-0 package material*
- *Footprint from 0.69cm²*
- *Input voltage: 3.3V ,5V ,12V*
- *Output voltage: 3.3V, 5V, 9V, 12V ,15V*
- *Custom solutions available)*
- *Operating temperature: -40°C to 105°C*
- *Optional: Continuous short circuit protection*

H-Model	Nominal Input Voltage (V)	Output Voltage (V)	Output Current (Max./Min) (mA)	Efficiency (%)	Package Style
HD1-0303S05Z15	3,3	3,3	152/15.2	76	DIP8
HD1-0305S05Z15	3,3	5	100/10	76	DIP8
HD1-0503S05Z15	5	3,3	152/15.2	76	DIP8
HD1-0505S05Z15	5	5	100/10	76	DIP8
HD1-0509S05Z15	5	9	55.5/5.55	77	DIP8
HD1-0512S05Z15	5	12	41.7/4.17	78	DIP8
HD1-0515S05Z15	5	15	33.3/3.33	78	DIP8
HD1-1205S05Z15	12	5	100/10	76	DIP8
HD1-1209S05Z15	12	9	55.5/5.55	77	DIP8
HD1-1212S05Z15	12	12	41.7/4.17	78	DIP8
HD1-1215S05Z15	12	15	33.3/3.33	78	DIP8

Package Unit: 35

Add suffix "P" for continous short circuit protection e.g. „HD1-0305S05Z15P".

The models listed above is just for standard type. If you need the special specification product, please contact our service member by telephone presented in shortform cover or e-mail to : sales@haufe-power.de

INPUT CHARACTERISTICS (Min./Typ./Max.):	
Voltage range 3.3V input types (V):	2.9 / 3.3 / 3.6
Voltage range 5V input types (V):	4.5 / 5.0 / 5.5
Voltage range 12V input types (V) :	11 / 12 / 13.3
ISOLATION CHARACTERISTICS:	
Isolation test voltage (VDC):	1500 / - / - (Tested for 1 second)
Resistance (Viso = 1000 VDC) (GΩ):	1 / - / -
ABSOLUTE MAXIMUM RATINGS:	
Short-circuit protection:	1 second
Lead temperature 1.5mm from case for 10 seconds:	300°C
Input voltage Vin:	5.5V / 7V / 15V (3.3V / 5V / 12V)

The information and specifications contained in this data sheet are believed to be correct at time of publication. However, HAUFE GmbH & Co. KG accepts no responsibility for consequences arising from printing errors or inaccuracies. Specifications are subject to change without notice. No rights under any patent accompany the sale of any such product(s) or information contained herein.

V1.1/0318 • Stand 0318 • Irrtümer vorbehalten • Copyright © 2018 by HAUFE GmbH & Co. KG

BLECHBEARBEITUNG MAGNETISCHE ABSCHIRMUNGEN INDUKTIVITÄTEN STROMVERSORGUNGEN

OUTPUT CHRACTERISTICS (Min. / Typ. / Max.):	
Rated Power TA= -40°C to 85°C (W):	- / - / 0.5
Voltage Set Point Accuracy (%):	(See tolerance envelope)
Line regulation High VIN to low VIN (%):	- / - / 1.2
Load Regulation (***) 5V output types (%):	- / - / 16
Load Regulation (***) All other types (output) (%):	- / - / 11
Output Characteristics Notes:	
All specifications typical at TA=25°C, nominal input voltage and rated output current unless otherwise specified.	

GENERAL CHARACTERISTICS (Min. / Typ. / Max.)	
Switching frequency (all input types) (kHz):	- / 110 / -

TEMPERATUR CHARACTERISTICS (Min. / Typ. / Max.)	
Derating if the temperature is ≥85°C (°C):	-40 / - / 105
Storage temperature (°C):	-55 / - / 130
Cooling:	Free air convection

TOLERANCE ENVELOPES

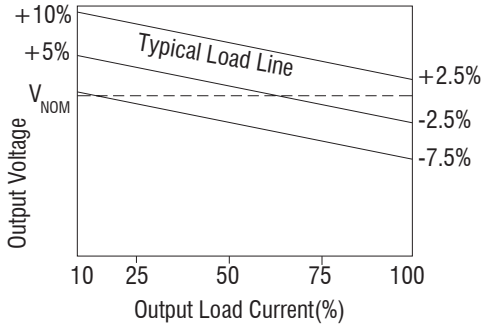

TEMPERATURE DERATING GRAPHS

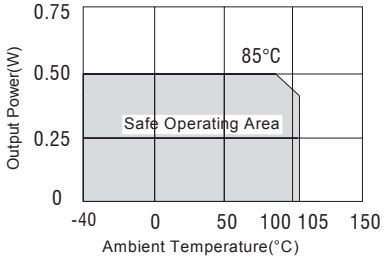

MECHANICAL DIMENSION

DIP Package

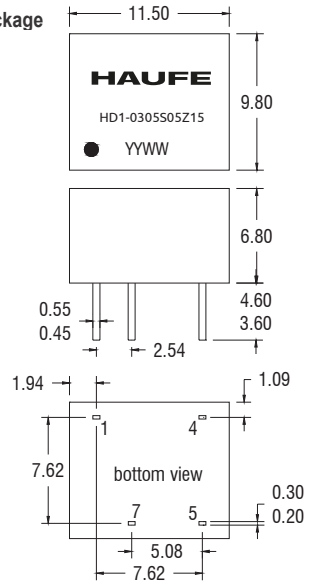

All dimensions in mm ±0.25mm. all pins on a 2.54mm pitch and within ±0.25mm of true position

TUBE OUTLINE DIMENSIONS

8Pin DIP Tube

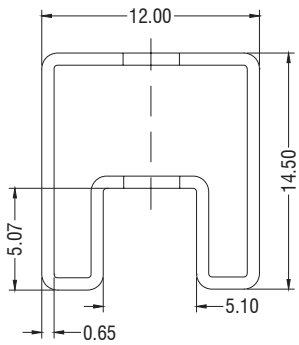

Unless otherwise stated all dimensions in mm±0.5mm.
Tube length (8 Pin DIP) :520mm ±2mm.
Tube length (4 Pin SIP) : 520mm ±2mm.

PIN CONNECTIONS

8 PIN DIP	
Pin	Function
1	-Vin
4	+Vin
5	+Vout
7	-Vout

RECOMMENDED FOOTPRINT DETAILS

8Pin DIP Package

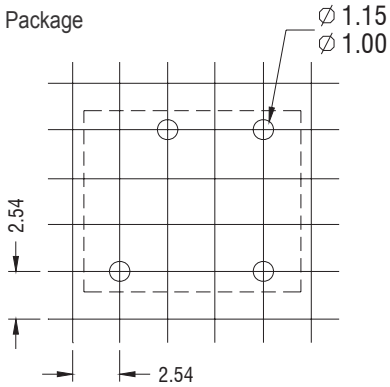

V1.1/0318 • Stand 0318 • Irrtümer vorbehalten • Copyright © 2018 by HAUFE GmbH & Co. KG

BLECHBEARBEITUNG
MAGNETISCHE ABSCHIRMUNGEN
INDUKTIVITÄTEN
STROMVERSORGUNGEN

HS1 - 0.5W 1.5KVDC Isolated Single Output DC/DC Converters

HAUFE®
„PRECISION FOR YOUR SUCCESS"
... since 1947

The HS1-XXYYS05Z15/P series are miniature, isolated low power and high efficiency DC/DC converters in a SIP package. They offer the ideal solution in many space critical applications for board level power distribution. The internal SMD construction makes it possible to offer a product with high performance at low cost. The series offers smaller size, improved efficiency, lower output ripple noise and 1.5KVDC isolation. Operating temperature -40 °C to +105 °C.

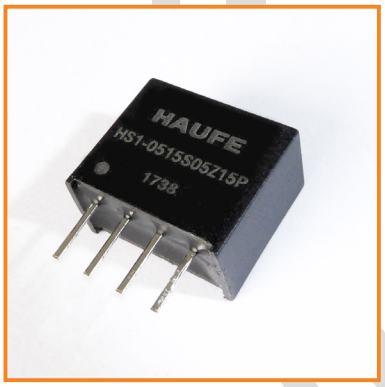

FEATURES:

- *RoHS compliant*
- *Single output rail*
- *1.5KVDC isolation*
- *High efficiency for low power applications*
- *SIP package styles*
- *Power density 0.36W/cm3*
- *UL 94V-0 package material*
- *Footprint from 0.69cm2*
- *Input voltage: 3.3V ,5V , 12V*
- *Output voltage: 3.3V, 5V, 9V, 12V ,15V*
- *Custom solutions available*
- *Operating temperature: -40°C to 105°C*
- *Optional: Continuous short circuit protection*

H-Model	Nominal Input Voltage (V)	Output Voltage (V)	Output Current (Max./ Min) (mA)	Efficiency (%)	Package Style
HS1-0303S05Z15	3,3	3,3	152/15.2	76	SIP4
HS1-0305S05Z15	3,3	5	100/10	76	SIP4
HS1-0503S05Z15	5	3,3	152/15.2	76	SIP4
HS1-0505S05Z15	5	5	100/10	76	SIP4
HS1-0509S05Z15	5	9	55.5/5.55	77	SIP4
HS1-0512S05Z15	5	12	41.7/4.17	78	SIP4
HS1-0515S05Z15	5	15	33.3/3.33	78	SIP4
HS1-1205S05Z15	12	5	100/10	76	SIP4
HS1-1209S05Z15	12	9	55.5/5.55	77	SIP4
HS1-1212S05Z15	12	12	41.7/4.17	78	SIP4
HS1-1215S05Z15	12	15	33.3/3.33	78	SIP4

The models listed above is just for standard type. If you need the special specification product, please contact our specialists: **sales@haufe-power.de**

Package Unit: 35

Add suffix "P" for continous short circuit protection e.g. „HS1-0305S05Z15P".

INPUT CHARACTERISTICS (Min./Typ./Max.**):**	
Voltage range 3.3V input types (V):	2.9 / 3.3 / 3.6
Voltage range 5V input types (V):	4.5 / 5.0 / 5.5
Voltage range 12V input types (V) :	11 / 12 / 13.3
ISOLATION CHARACTERISTICS:	
Isolation test voltage (VDC):	1500 / - / - (Tested for 1 second)
Resistance (Viso = 1000 VDC) (GΩ):	1 / - / -
ABSOLUTE MAXIMUM RATINGS:	
Short-circuit protection:	1 second
Lead temperature 1.5mm from case for 10 seconds:	300°C
Input voltage Vin:	5.5V / 7V / 15V (3.3V / 5V / 12V)

The information and specifications contained in this data sheet are believed to be correct at time of publication. However, HAUFE GmbH & Co. KG accepts no responsibility for consequences arising from printing errors or inaccuracies. Specifications are subject to change without notice. No rights under any patent accompany the sale of any such product(s) or information contained herein.

V1.1/0318 • Stand 0318 • Irrtümer vorbehalten • Copyright © 2018 by HAUFE GmbH & Co. KG

BLECHBEARBEITUNG MAGNETISCHE ABSCHIRMUNGEN INDUKTIVITÄTEN STROMVERSORGUNGEN

HAUFE GmbH & Co. KG • Weilburger Str. 14 • 61250 Usingen • Tel.: +49 6081 9153-0 • info@haufe-uebertrager.de

OUTPUT CHRACTERISTICS (Min. / Typ. / Max.):	
Rated Power TA= -40°C to 85°C (W):	- / - / 0.5
Voltage Set Point Accuracy (%):	(See tolerance envelope)
Line regulation High VIN to low VIN (%):	- / - / 1.2
Load Regulation (***) 5V output types (%):	- / - / 16
Load Regulation (***) All other types (output) (%):	- / - / 11
(= 10% load to rated load)***	

Output Characteristics Notes:

All specifications typical at TA=25°C, nominal input voltage and rated output current unless otherwise specified.

TEMPERATURE DERATING GRAPHS

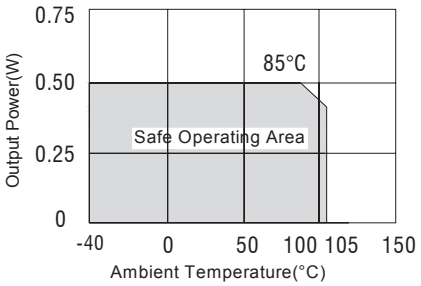

TOLERANCE ENVELOPES

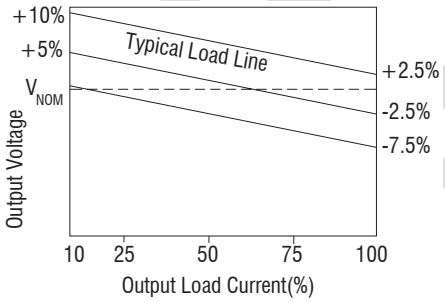

MECHANICAL DIMENSION

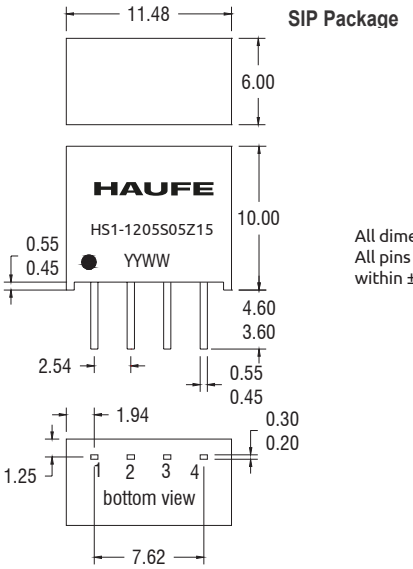

All dimensions in mm ±0.25mm
All pins on a 2.54mm pitch and
within ±0.25mm of true positio

RECOMMENDED FOOTPRINT DETAILS

4Pin SIP Package

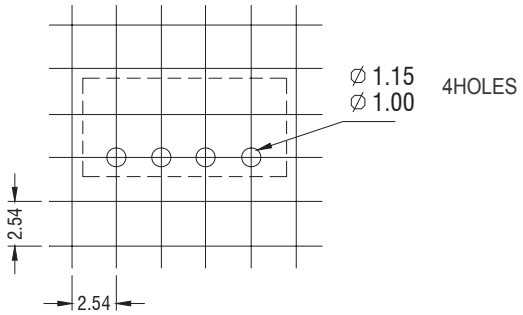

TUBE OUTLINE DIMENSIONS

4Pin SIP Tube

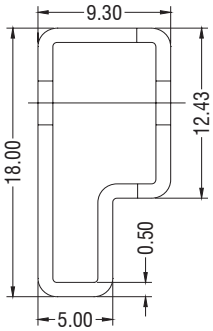

PIN CONNECTIONS

4 PIN SIP	
Pin	Function
1	-Vin
2	+Vin
3	-Vout
4	+Vout

V1.1/0318 • Stand 0318 • Irrtümer vorbehalten • Copyright © 2018 by HAUFE GmbH & Co. KG

INDUKTIVITÄTEN
STROMVERSORGUNGEN
BLECHBEARBEITUNG
MAGNETISCHE ABSCHIRMUNGEN

HD2 - 1W 2KVDC Isolated Single Output DC/DC Converters

HAUFE®
„PRECISION FOR YOUR SUCCESS"
... since 1947

The HD2-XXYYS10Z20 series are miniature, isolated 1W DC/DC converters in a DIP package. They offer the ideal solution in many space critical applications for board level power distribution. The internal SMD construction makes it possible to offer a product with high performance at low cost. The series offers smaller size, improved efficiency, lower output ripple noise

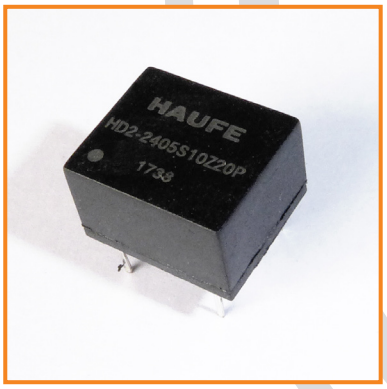

FEATURES:

- *RoHS compliant*
- *Efficiency up to 81%*
- *UL 94V-0 package material*
- *Input voltage: 3.3V, 5V, 12V, 15V, 24V, 48V*
- *Single isolated output*
- *Operating temperature :-40_ to 105_ (3.3-12V)*
- *Operating temperature :-40_ to 85_ (15-48V)*
- *Footprint from 0.69cm2*
- *Output voltage: 3.3V,5V, 9V, 12V, 15V & 24V*
- *Industry Standard Pinout*
- *Custom Solutions available (15-48V)*
- *2KVDC isolation Power density*
- *Optional: Continuous short circuit protection*

H-Model	Nominal Input Voltage (V)	Output Voltage (V)	Output Current (Max./Min) (mA)	Efficiency (%)	Package Style
HD2-0303S10Z20	3,3	3,3	303/30.3	72	DIP8
HD2-0305S10Z20	3,3	5	200/20	74	DIP8
HD2-0503S10Z20	5	3,3	303/30.3	72	DIP8
HD2-0505S10Z20	5	5	200/20	68	DIP8
HD2-0509S10Z20	5	9	110/11	78	DIP8
HD2-0512S10Z20	5	12	83/8.3	77	DIP8
HD2-0515S10Z20	5	15	66/6.6	81	DIP8
HD2-0524S10Z20	5	24	42/4.2	80	DIP8
HD2-1203S10Z20	12	3,3	303/30.3	72	DIP8
HD2-1205S10Z20	12	5	200/20	69	DIP8
HD2-1209S10Z20	12	9	110/11	74	DIP8
HD2-1212S10Z20	12	12	83/8.3	76	DIP8
HD2-1215S10Z20	12	15	66/6.6	75	DIP8
HD2-1505S10Z20	15	5	200/20	71	DIP8
HD2-2403S10Z20	24	3,3	303/30.3	71	DIP8
HD2-2405S10Z20	24	5	200/20	70	DIP8
HD2-2409S10Z20	24	9	111/11.1	75	DIP8
HD2-2412S10Z20	24	12	83/8.3	81	DIP8
HD2-2415S10Z20	24	15	66/6.6	81	DIP8
HD2-2424S10Z20	24	24	41.5/4.15	80	DIP8
HD2-4805S10Z20	48	5	200/20	70	DIP8
HD2-4809S10Z20	48	9	111/11.1	75	DIP8
HD2-4812S10Z20	48	12	83/8.3	80	DIP8
HD2-4815S10Z20	48	15	66/6.6	80	DIP8

Package Unit: 35

The models listed above is just for standard type. If you need the special specification product, please contact our specialists: **sales@haufe-power.de**

Add suffix "P" for continous short circuit protection e.g. „HD2-4812S10Z20P".

The information and specifications contained in this data sheet are believed to be correct at time of publication. However, HAUFE GmbH & Co. KG accepts no responsibility for consequences arising from printing errors or inaccuracies. Specifications are subject to change without notice. No rights under any patent accompany the sale of any such product(s) or information contained herein.

V1.1/0318 • Stand 0318 • Irrtümer vorbehalten • Copyright © 2018 by HAUFE GmbH & Co. KG

BLECHBEARBEITUNG MAGNETISCHE ABSCHIRMUNGEN INDUKTIVITÄTEN STROMVERSORGUNGEN

INPUT CHARACTERISTICS (Min./Typ./Max.):	
Voltage range 3.3V input types (V):	2.9 / 3.3 / 3.6
Voltage range 5V input types (V):	4.5 / 5.0 / 5.5
Voltage range 12V input types (V) :	11 / 12 / 13.3
Voltage range 15V input types (V):	13.4 / 15 / 16.4
Voltage range 24V input types V):	21.6 / 24 / 26.4
Voltage range 48V input types (V):	43.2 / 48 / 52.8
Reflected ripple current (mA p-p):	- / 26 / 48

ISOLATION CHARACTERISTICS:	
Isolation test voltage (VDC):	2000 / - / - (Tested for 1 second)
Resistance (Viso = 1000 VDC) (GΩ):	1 / - / -

ABSOLUTE MAXIMUM RATINGS:	
Short-circuit protection:	1 second (15-48V)
Lead temperature 1.5mm from case for 10 seconds:	300°C (15-48V)
Input voltage Vin:	18V / 28V / 54V (15V / 24V / 48V)

OUTPUT CHRACTERISTICS (Min. / Typ. / Max.):	
Rated Power TA= -40°C to 85°C (W):	- / - / 1.0
Voltage Set Point Accuracy (%):	See tolerance envelope
Line regulation High VIN to low VIN (%):	- / 1.0 / 1.2
Load Regulation (***) 3.3V output types (%):	- / 14 / 15
Load Regulation (***) 5V output types (%):	- / 14 / 15 (3.3-12V) - / - / 15 (15-48V)
Load Regulation (***) 9V output (%):	- / 9 / 10
Load Regulation (***) 12V output (%):	- / 7.5 / 9.5
Load Regulation (*** 15V output (%):	- / 7.0 / 8.5
Load Regulation (***) 24V output (%):	- / 5.5 / 7.5
Load Regulation (***) All other types (output) (%):	- / - / 10 (15-48V)

(= 10% load to rated load)***

Output Characteristics Notes: All specifications typical at TA=25°C, nominal input voltage and rated output current unless otherwise specified.

GENERAL CHARACTERISTICS (Min. / Typ. / Max.)	
Switching frequency 3.3V input (kHz):	- / 95 / -
Switching frequency 5V input (kHz):	- / 110 / -
Switching frequency 12V input (kHz):	- / 145 / -
Switching frequency 15V, 24V, 48V input (kHz):	- / 100 / -

TEMPERATUR CHARACTERISTICS (Min. / Typ. / Max.)	
Derating if the temperature is ≥85°C (°C):	-40 / - / 105
Storage temperature 3.3V 5V, 12V (°C):	-55 / - / 150
Storage temperature 15V, 24V, 48V (°C):	-55 / - / 130
Case temperature above ambient. 5V output (°C):	- / - / 41
Case temperature above ambient. All other output (°C):	- / - / 32
Operatingtemperature 15V, 24V, 48V (°C):	-40 / - / 85
Cooling:	Free air convection

SOLDERING INFORMATION:

This series is compatible with RoHS soldering systems with a peak wave solder temperature of 300°C for 10 seconds. Both types in this series are backward compatible with Sn/Pb soldering systems.

V1.1/0318 • Stand 0318 • Irrtümer vorbehalten • Copyright © 2018 by HAUFE GmbH & Co. KG

BLECHBEARBEITUNG MAGNETISCHE ABSCHIRMUNGEN INDUKTIVITÄTEN STROMVERSORGUNGEN

TEMPERATURE DERATING GRAPHS

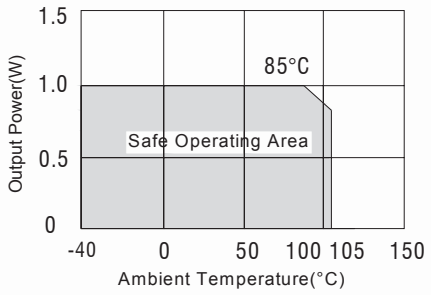

TOLERANCE ENVELOPES

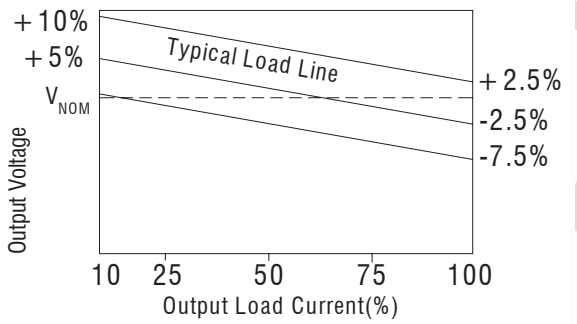

MECHANICAL DIMENSION

DIP Package

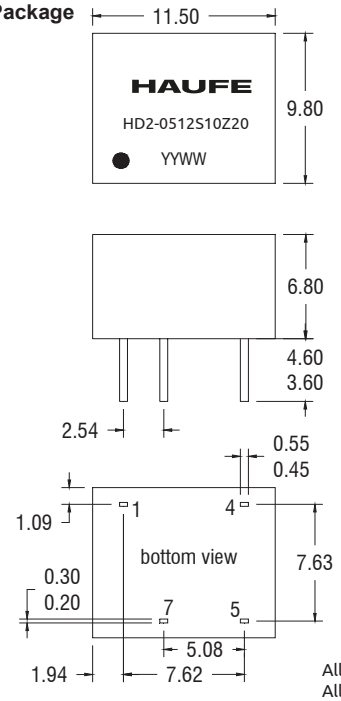

All dimensions in mm ±0.25mm.
All pins on a 2.54mm pitch and within ±0.25mm of true position.
Weight: 1.48g (DIP)

PIN CONNECTIONS

8 PIN DIP	
Pin	Function
1	-Vin
4	+Vin
5	+Vout
7	-Vout

RECOMMENDED FOOTPRINT DETAILS

8Pin DIP Package

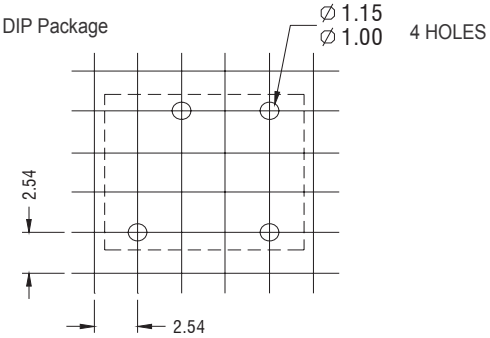

TUBE OUTLINE DIMENSIONS

8Pin DIP Tube

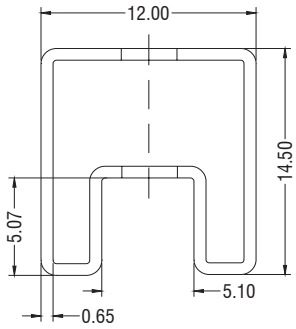

Unless otherwise stated all dimensions in mm ±0.5mm.

Tube length (8 Pin DIP) : 520mm ±2mm.

V1.1/0318 • Stand 0318 • Irrtümer vorbehalten • Copyright © 2018 by HAUFE GmbH & Co. KG

BLECHBEARBEITUNG
MAGNETISCHE ABSCHIRMUNGEN
INDUKTIVITÄTEN
STROMVERSORGUNGEN

The HS2-XXYYS10Z15 series are miniature, isolated 1W DC/DC converters in a SIP package. They offer the ideal solution in many space critical applications for board level power distribution. The internal SMD construction makes it possible to offer a product with high performance at low cost. The series offers smaller size, improved efficiency, lower output ripple noise

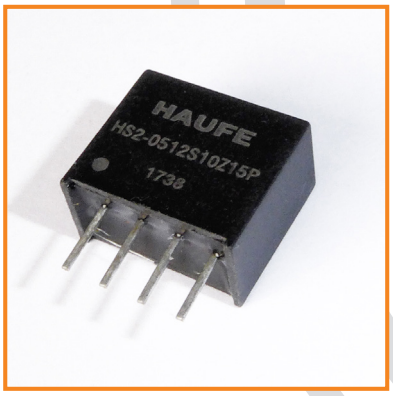

FEATURES:

- *RoHS compliant*
- *Efficiency up to 81%*
- *UL 94V-0 package material*
- *Input voltage: 3.3V, 5V, 12V, 15V, 24V, 48V*
- *Single isolated output*
- *Operating temperature :-40 to 105 (3.3-12V)*
- *Operating temperature :-40 to 85 (15-48V)*
- *Footprint from 0.69cm2*
- *Output voltage: 3.3V,5V, 9V, 12V, 15V & 24V*
- *Industry Standard Pinout*
- *Custom Solutions available (15-48V)*
- *1.5KVDC isolation Power density*
- *1.53W/cm3 (3.3-12V)*
- *Power density 1.45W/cm3 (15-48V)*
- *Industry standard pinout*
- *Isolation 1.5KVDC*
- *Optional: Continuous short circuit protection*

H-Model	Nominal Input Voltage (V)	Output Voltage (V)	Output Current (Max./ Min) (mA)	Efficiency (%)	Package Style
HS2-0303S10Z15	3,3	3,3	303/30.3	72	SIP4
HS2-0305S10Z15	3,3	5	200/20	74	SIP4
HS2-0503S10Z15	5	3,3	303/30.3	72	SIP4
HS2-0505S10Z15	5	5	200/20	70	SIP4
HS2-0509S10Z15	5	9	110/11	78	SIP4
HS2-0512S10Z15	5	12	83/8.3	78	SIP4
HS2-0515S10Z15	5	15	66/6.6	80	SIP4
HS2-0524S10Z15	5	24	42/4.2	79	SIP4
HS2-1203S10Z15	12	3,3	303/30.3	72	SIP4
HS2-1205S10Z15	12	5	200/20	71	SIP4
HS2-1209S10Z15	12	9	110/11	73	SIP4
HS2-1212S10Z15	12	12	83/8.3	76	SIP4
HS2-1215S10Z15	12	15	66/6.6	74	SIP4
HS2-1505S10Z15	15	5	200/20	71	SIP4
HS2-1515S10Z15	15	15	67/6.7	78	SIP4
HS2-2403S10Z15	24	3,3	303/30.3	71	SIP4
HS2-2405S10Z15	24	5	200/20	71	SIP4
HS2-2409S10Z15	24	9	111/11.1	75	SIP4
HS2-2412S10Z15	24	12	83/8.3	80	SIP4
HS2-2415S10Z15	24	15	66/6.6	80	SIP4
HS2-2424S10Z15	24	24	41.5/4.15	80	SIP4
HS2-4805S10Z15	48	5	200/20	70	SIP4
HS2-4809S10Z15	48	9	111/11.1	75	SIP4
HS2-4812S10Z15	48	12	83/8.3	81	SIP4
HS2-4815S10Z15	48	15	66/6.6	81	SIP4

Package Unit: 35

Add suffix "P" for continous short circuit protection e.g. „HS2-0305S10Z10P".

The models listed above is just for standard type. If you need the special specification product, please contact our specialists: **sales@haufe-power.de**

The information and specifications contained in this data sheet are believed to be correct at time of publication. However, HAUFE GmbH & Co. KG accepts no responsibility for consequences arising from printing errors or inaccuracies. Specifications are subject to change without notice. No rights under any patent accompany the sale of any such product(s) or information contained herein.

V1.1/0318 • Stand 0318 • Irrtümer vorbehalten • Copyright © 2018 by HAUFE GmbH & Co. KG

BLECHBEARBEITUNG MAGNETISCHE ABSCHIRMUNGEN INDUKTIVITÄTEN STROMVERSORGUNGEN

INPUT CHARACTERISTICS (Min./Typ./Max.**):**	
Voltage range 3.3V input types (V):	2.9 / 3.3 / 3.6
Voltage range 5V input types (V):	4.5 / 5.0 / 5.5
Voltage range 12V input types (V) :	11 / 12 / 13.3
Voltage range 15V input types (V):	13.4 / 15 / 16.4
Voltage range 24V input types V):	21.6 / 24 / 26.4
Voltage range 48V input types (V):	43.2 / 48 / 52.8
Reflected ripple current (mA p-p) (3.3V, 5V, 12V):	- / 26 / 48
ISOLATION CHARACTERISTICS:	
Isolation test voltage (VDC):	1500
	Tested for 1 second
Resistance (Viso = 1000 VDC) (GΩ):	1 / - / -
ABSOLUTE MAXIMUM RATINGS:	
Short-circuit protection:	1 second (15-48V)
Lead temperature 1.5mm from case for 10 seconds:	300°C (15-48V)
Input voltage Vin:	18V / 28V / 54V (15V / 24V / 48V)
OUTPUT CHRACTERISTICS (Min. / Typ. / Max.**):**	
Rated Power TA= -40°C to 85°C (W):	- / - / 1.0
Voltage Set Point Accuracy (%):	See tolerance envelope
Line regulation High VIN to low VIN (%):	- / 1.0 / 1.2
Load Regulation 3.3V output types (%):	- / 14 / 15
Load Regulation (***) 5V output types (%):	- / 14 / 15 (3.3-12V) - / - / 15 (15-48V)
Load Regulation (***) 9V output (%):	- / 9 / 10
Load Regulation (***) 12V output (%):	- / 7.5 / 9.5
Load Regulation (*** 15V output (%):	- / 7.0 / 8.5
Load Regulation (***) 24V output (%):	- / 5.5 / 7.5
Load Regulation (***) All other types (output) (%):	- / - / 10 (15-48V)
(= 10% load to rated load)***	
Output Characteristics Notes:	
All specifications typical at TA=25°C, nominal input voltage and rated output current unless otherwise specified.	
GENERAL CHARACTERISTICS (Min. / Typ. / Max.)	
Switching frequency (all input types) (kHz):	- / 100 / - (15-48V)
Switching frequency 3.3V input (kHz):	- / 95 / -
Switching frequency 5V input (kHz):	- / 110 / -
Switching frequency 12V input (kHz):	- / 145 / -
TEMPERATUR CHARACTERISTICS (Min. / Typ. / Max.)	
Derating if the temperature is ≥85°C (°C):	-40 / - / 105
Storage temperature (°C):	-55 / - / 150
Case temperature above ambient. 5V output (°C):	- / - / 41
Case temperature above ambient. All other output (°C):	- / - / 32
All output types (°C):	-40 / - / 85
Cooling:	Free air convection

V1.1/0318 • Stand 0318 • Irrtümer vorbehalten • Copyright © 2018 by HAUFE GmbH & Co. KG

BLECHBEARBEITUNG
MAGNETISCHE ABSCHIRMUNGEN
INDUKTIVITÄTEN
STROMVERSORGUNGEN

TEMPERATURE DERATING GRAPHS

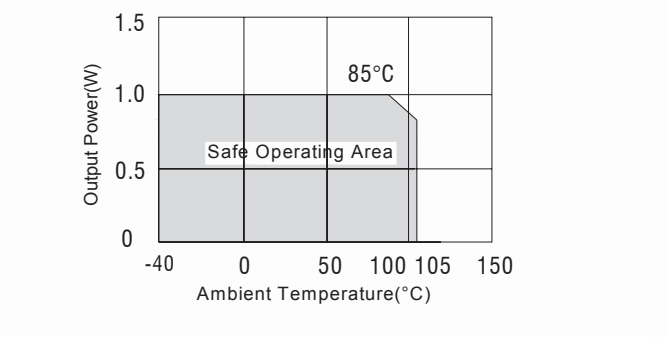

TOLERANCE ENVELOPES

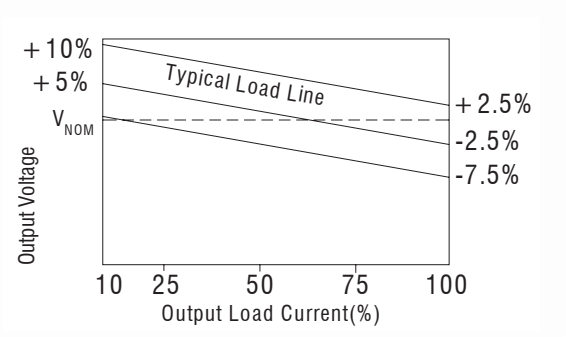

SOLDERING INFORMATION

This series is compatible with RoHS soldering systems with a peak wave solder temperature of 300°C for 10 seconds. Both types in this series are backward compatible with Sn/Pb soldering systems.

MECHANICAL DIMENSION

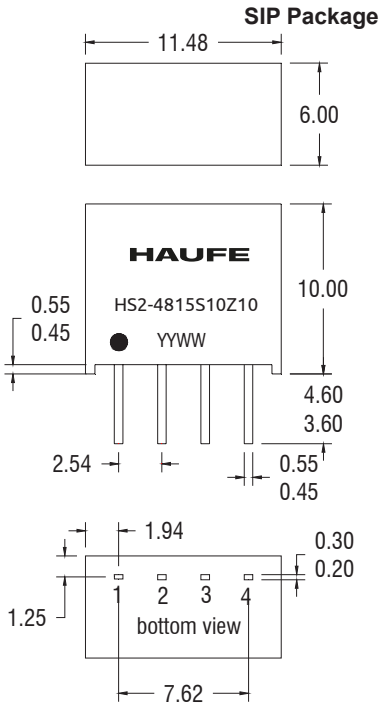

All dimensions in mm ±0.25mm. All pins on a 2.54mm pitch and within ±0.25mm of true position. Weight: 1.30g (SIP)

RECOMMENDED FOOTPRINT DETAILS

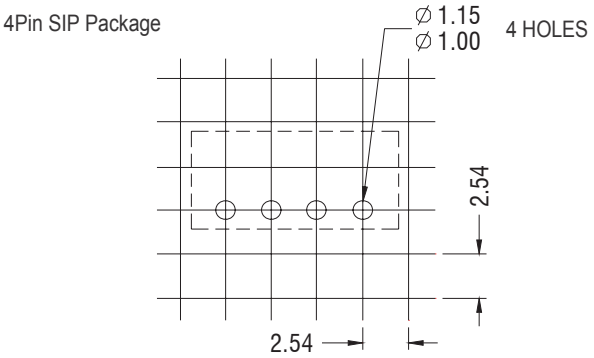

TUBE OUTLINE DIMENSIONS

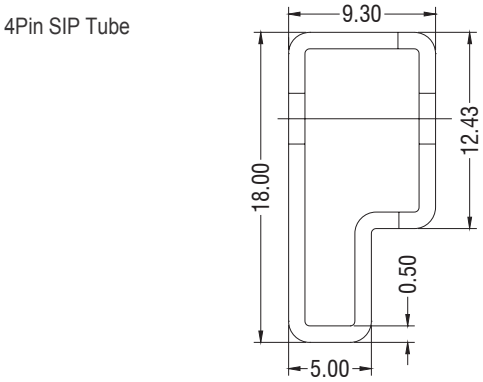

Unless otherwise stated, all dimensions in mm ±0.5mm
Tube length (4 Pin SIP): 520mm ±2mm

PIN CONNECTIONS

4 PIN SIP	
Pin	Function
1	-Vin
2	+Vin
3	-Vout
4	+Vout

V1.1/0318 • Stand 0318 • Irrtümer vorbehalten • Copyright © 2018 by HAUFE GmbH & Co. KG

BLECHBEARBEITUNG
MAGNETISCHE ABSCHIRMUNGEN
INDUKTIVITÄTEN
STROMVERSORGUNGEN

HS3 - 1W Isolated Single Output DC/DC Converters

HAUFE®
„PRECISION FOR YOUR SUCCESS"
... since 1947

The HS3S series are miniature, isolated 1W DC/DC converters in a SIP package. They offer the ideal solution in many space critical applications for board level power distribution. The internal SMD construction makes it possible to offer a product with high performance at low cost.
The series offers smaller size, improved efficiency, lower output ripple noise and 3KVDC isolation.

FEATURES:

- *RoHS compliant*
- *3 KVDC isolation*
- *Efficiency up to 80%,*
- *Operating temperature: -40°C to 105°C*
- *Power density up to 0.90W/cm³*
- *UL 94V-0 package material,*
- *Footprint from 1.17cm²*
- *Industry standard pinout*
- *Input voltage: 3.3V, 5V, 12V, 15V, 24V,*
- *Output voltage: 3.3V, 5V, 9V, 12V, 15V, 24V*
- *Custom solutions available*
- *Optional: Continuous short circuit protection*

H-Model	Nominal Input Voltage (V)	Output Voltage (V)	Output Current (Max./Min) (mA)	Efficiency (%)	Package Style
HS3-0303S10Z30	3,3	3,3	303/30.3	72	SIP7
HS3-0305S10Z30	3,3	5	200/20	74	SIP7
HS3-0503S10Z30	5	3,3	303/30.3	72	SIP7
HS3-0505S10Z30	5	5	200/20	68	SIP7
HS3-0509S10Z30	5	9	111/11.1	78	SIP7
HS3-0512S10Z30	5	12	84/8.1	76	SIP7
HS3-0515S10Z30	5	15	68/6.8	79	SIP7
HS3-0524S10Z30	5	24	42/4.2	81	SIP7
HS3-1203S10Z30	12	3,3	303/30.3	74	SIP7
HS3-1205S10Z30	12	5	200/20	69	SIP7
HS3-1209S10Z30	12	9	111/11.1	76	SIP7
HS3-1212S10Z30	12	12	84/8.4	77	SIP7
HS3-1215S10Z30	12	15	68/6.8	76	SIP7
HS3-1224S10Z30	12	24	42/4.2	84	SIP7
HS3-1505S10Z30	15	5	200/20	69	SIP7
HS3-1512S10Z30	15	12	83/8.3	76	SIP7
HS3-1515S10Z30	15	15	67/6.7	75	SIP7
HS3-2405S10Z30	24	5	200/20	71	SIP7
HS3-2409S10Z30	24	9	111/11.1	78	SIP7
HS3-2412S10Z30	24	12	84/8.4	78	SIP7
HS3-2415S10Z30	24	15	68/6.8	80	SIP7
HS3-2424S10Z30	24	24	42/4.2	80	SIP7

Package Unit: 25

The models listed above is just for standard type. If you need the special specification product, please contact our specialists: **sales@haufe-power.de**

Add suffix "P" for continous short circuit protection e.g. „HS3-0305S10Z30P".

The information and specifications contained in this data sheet are believed to be correct at time of publication. However, HAUFE GmbH & Co. KG accepts no responsibility for consequences arising from printing errors or inaccuracies. Specifications are subject to change without notice. No rights under any patent accompany the sale of any such product(s) or information contained herein.

V1.1/0318 • Stand 0318 • Irrtümer vorbehalten • Copyright © 2018 by HAUFE GmbH & Co. KG

BLECHBEARBEITUNG MAGNETISCHE ABSCHIRMUNGEN INDUKTIVITÄTEN STROMVERSORGUNGEN

HAUFE GmbH & Co. KG • Weilburger Str. 14 • 61250 Usingen • Tel.: +49 6081 9153-0 • info@haufe-uebertrager.de

INPUT CHARACTERISTICS (Min./Typ./Max.**):**	
Voltage range 3.3V input types (V):	2.9 / 3.3 / 3.6
Voltage range 5V input types (V):	4.5 / 5 / 5.5
Voltage range 12V input types (V) :	11 / 12 / 13.3
Voltage range 15V input types (V):	13.4 / 15 / 16.4
Voltage range 24V input types V):	22 / 24 / 26.6
ISOLATION CHARACTERISTICS:	
Isolation test voltage (VDC):	3000 / - / - (Tested for 1 second)
Resistance (Viso = 1000 VDC) (GΩ):	1 / - / -
ABSOLUTE MAXIMUM RATINGS:	
Short-circuit protection:	1 sec.
Lead temperature 1.5mm from case for 10 seconds:	300°C
Internal power dissipation :	540mW
Input voltage Vin 03 / 05 / 12 /15 / 24:	5.5V / 7V / 15V / 18V / 28V
Comment on AMS: All specs typ. at TA-25°C, nominal input voltage and rated output current unless otherwise specified	
OUTPUT CHRACTERISTICS (Min. / Typ. / Max.**):**	
Rated Power TA= -40°C to 85°C (W):	- / - / 1
Voltage Set Point Accuracy (%):	See tolerance envelope
Line regulation High VIN to low VIN (%):	- / 1.2 / -
Load Regulation (***) 3V, 5V , 9V output types (%):	- / 13 / -
Load Regulation (***) 12V output (%):	- / 7 / -
Load Regulation (*** 15V output (%):	- / 7 / -
Load Regulation (***) 24V output (%):	- / 7 / -
(= 10% load to rated load)***	
Output Characteristics Notes:	
All specifications typical at TA=25°C, nominal input voltage and rated output current unless otherwise specified.	
GENERAL CHARACTERISTICS (Min. / Typ. / Max.)	
Switching frequency 3.3V, 5V input (kHz):	- / 120 / -
Switching frequency 12V input (kHz):	- / 160 / -
Switching frequency 15V input (kHz):	- / 90 / -
Switching frequency 24V input (kHz):	- / 90 / -
TEMPERATUR CHARACTERISTICS (Min. / Typ. / Max.)	
Derating if the temperature ≥85°C	-40 / - / +105
Storage °C	-50 / - / +130
Case temperature above ambient. 5V output (°C):	- / 35 / -
Case temperature above ambient. All other output (°C):	- / 30 / -
Cooling:	Free air convection

V1.1/0318 • Stand 0318 • Irrtümer vorbehalten • Copyright © 2018 by HAUFE GmbH & Co. KG

BLECHBEARBEITUNG
MAGNETISCHE ABSCHIRMUNGEN
INDUKTIVITÄTEN
STROMVERSORGUNGEN

TOLERANCE ENVELOPES

HS3S-2405XXXX

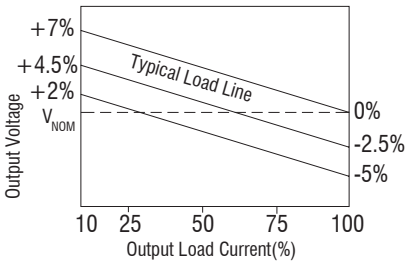

HS3S-2412XXXX HS3S-2415XXXX

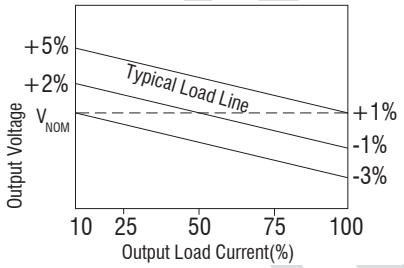

other HS3S types

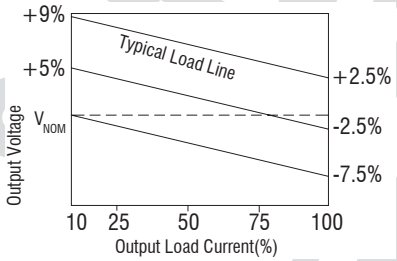

MECHANICAL DIMENSION

SIP Package

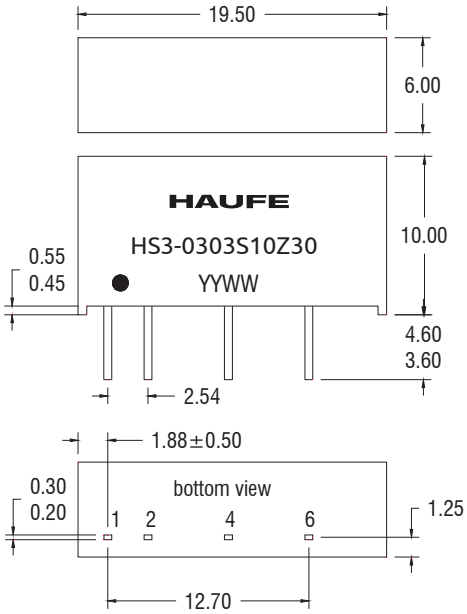

All dimensions in mm ±0.25mm. All pins on a 2.54mm pitch and within ±0.25mm of true position.

TEMPERATURE DERATING GRAPHS

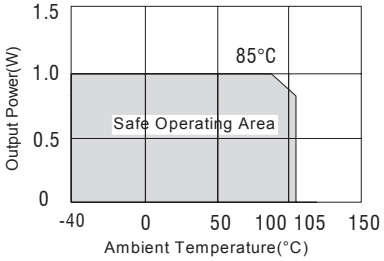

PIN CONNECTIONS

7 PIN SIP	
Pin	Function
1	+Vin
2	-Vin
4	-Vout
6	+Vout

RECOMMENDED FOOTPRINT DETAILS

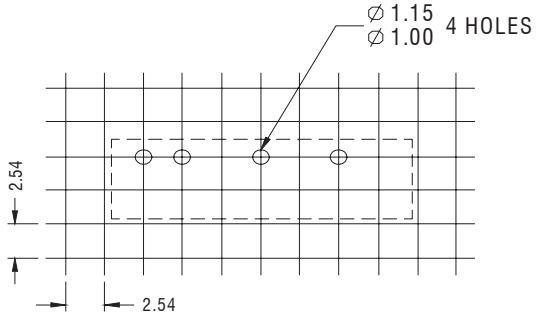

All dimensions in mm±0.25mm

TUBE OUTLINE DIMENSIONS

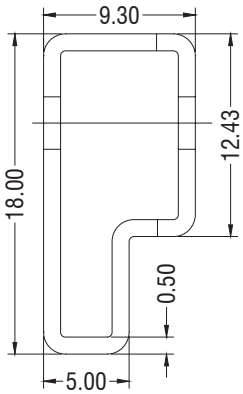

All dimensions in mm±0.25mm

Tube Quantity : 25PCS

V1.1/0318 • Stand 0318 • Irrtümer vorbehalten • Copyright © 2018 by HAUFE GmbH & Co. KG

INDUKTIVITÄTEN
STROMVERSORGUNGEN
BLECHBEARBEITUNG
MAGNETISCHE ABSCHIRMUNGEN

HS3 - 1W Isolated Dual Output DC/DC Converters

HAUFE®
„PRECISION FOR YOUR SUCCESS"
... since 1947

The HS3 series are miniature, isolated 1W DC/DC converters in a SIP package. They offer the ideal solution in many space critical applications for board level power distribution. The internal SMD construction makes it possible to offer a product with high performance at low cost. The series offers smaller size, improved efficiency, lower output ripple noise and 3KVDC isolation.

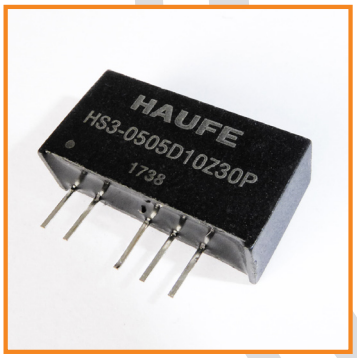

FEATURES:

- *RoHS compliant*
- *Efficiency up to 81%*
- *Power density up to 0.86W/cm³*
- *Dual output from a single input rail*
- *UL 94V-0 package material*
- *No heat sink required*
- *3KVDC isolation*
- *Industry standard pinout*
- *Power sharing on output*
- *Input voltage: 5V, 12V, 15V, 24V , 48V*
- *Output voltage: ±5V, ±9V, ±12V, ±15V , ±24V*
- *Operating temperature :-40°C to +105°C*
- *Optional: Continuous short circuit protection*

H-Model	Nominal Input Voltage (V)	Output Voltage (V)	Output Current (Max./Min) (mA)	Efficiency (%)	Package Style
HS3-0505D10Z30	5	±5	±100/±10	67	SIP7
HS3-0509D10Z30	5	±9	±56/±5.6	76	SIP7
HS3-0512D10Z30	5	±12	±43/±4.3	79	SIP7
HS3-0515D10Z30	5	±15	±33/±3.3	78	SIP7
HS3-0524D10Z30	5	±24	±21/±2.1	81	SIP7
HS3-1205D10Z30	12	±5	±100/±10	68	SIP7
HS3-1209D10Z30	12	±9	±56/±5.6	74	SIP7
HS3-1212D10Z30	12	±12	±43/±4.3	77	SIP7
HS3-1215D10Z30	12	±15	±33/±3.3	75	SIP7
HS3-1505D10Z30	15	±5	±100/±10	71	SIP7
HS3-1512D10Z30	15	±12	±43/±4.3	77	SIP7
HS3-1515D10Z30	15	±15	±33/±3.3	80	SIP7
HS3-2405D10Z30	24	±5	±100/±10	69	SIP7
HS3-2409D10Z30	24	±9	±56/±5.6	78	SIP7
HS3-2412D10Z30	24	±12	±42/±4.2	81	SIP7
HS3-2415D10Z30	24	±15	±34/±3.4	80	SIP7
HS3-4805D10Z30	48	±5	±100/±10	70	SIP7
HS3-4809D10Z30	48	±9	±56/±5.6	79	SIP7
HS3-4812D10Z30	48	±12	±43/±4.3	79	SIP7
HS3-4815D10Z30	48	±15	±33/±3.3	79	SIP7

Package Unit: 25

The models listed above is just for standard type. If you need the special specification product, please contact our specialists: **sales@haufe-power.de**

Add suffix "P" for continous short circuit protection e.g. „HS3-0305D10Z30P".

The information and specifications contained in this data sheet are believed to be correct at time of publication. However, HAUFE GmbH & Co. KG accepts no responsibility for consequences arising from printing errors or inaccuracies. Specifications are subject to change without notice. No rights under any patent accompany the sale of any such product(s) or information contained herein.

V1.1/0318 • Stand 0318 • Irrtümer vorbehalten • Copyright © 2018 by HAUFE GmbH & Co. KG

BLECHBEARBEITUNG MAGNETISCHE ABSCHIRMUNGEN INDUKTIVITÄTEN STROMVERSORGUNGEN

HAUFE GmbH & Co. KG • Weilburger Str. 14 • 61250 Usingen • Tel.: +49 6081 9153-0 • info@haufe-uebertrager.de

INPUT CHARACTERISTICS (Min./Typ./Max.):	
Voltage range 3.3V input types (V):	2.9 / 3.3 / 3.6
Voltage range 5V input types (V):	4.5 / 5 / 5.5
Voltage range 12V input types (V) :	10.7 / 12 / 13.1
Voltage range 15V input types (V):	13.5 / 15 / 16.5
Voltage range 24V input types V):	22 / 24 / 27
Voltage range 48V input types (V):	44 / 48 / 53

ISOLATION CHARACTERISTICS:	
Isolation test voltage (VDC):	3000 / - / - (Tested for 1 second)
Resistance (Viso = 1000 VDC) (GΩ):	1 / - / -

ABSOLUTE MAXIMUM RATINGS:	
Lead temperature 1.5mm from case for 10 seconds:	300°C
Internal power dissipation :	450mW
Input voltage Vin:	5.5V / 7V / 15V / 18V (HS3D variants: 03 / 05 / 12 / 15 / 24 / 28 / 48 / 54V)

All specs typ. at TA-25°C, nominal input voltage and rated output current unless otherwise specified

OUTPUT CHRACTERISTICS (Min. / Typ. / Max.):	
Rated Power TA= -40°C to 85°C (W):	- / - / 1
Voltage Set Point Accuracy (%):	See tolerance envelope
Line regulation High VIN to low VIN (%):	- / 1 / 1.2
Load Regulation (***) 5V output types (%):	- / 10 / 13 (5V & 12V input) - / 6 / 10 (15V input) - / - / 14 (24V-48V input)
Load Regulation (***) 9V output (%):	- / 9 / 10 (5V & 12V input)
Load Regulation (***) 12V output (%):	- /7 / 8 (5V & 12V input) - / 3 / 4 (15V input)
Load Regulation (*** 15V output (%):	- / 6 / 7 (5V & 12V input) - / 3 / 4 (15V input)
Load Regulation (***) All other types (output) (%):	- / - / 12

(= 10% load to rated load)***

Output Characteristics Notes:

All specifications typical at TA=25°C, nominal input voltage and rated output current unless otherwise specified.

GENERAL CHARACTERISTICS (Min. / Typ. / Max.)	
Switching frequency 3.3V input (kHz):	- / 95 / -
Switching frequency 5V input (kHz):	- / 110 / -
Switching frequency 12V input (kHz):	- / 130 / -
Switching frequency 15V input (kHz):	- / 90 / -
Switching frequency 24V input (kHz):	- / 110 / -
Switching frequency 48V input (kHz):	- / 110 / -

TEMPERATUR CHARACTERISTICS (Min. / Typ. / Max.)	
Derating if the temperature is ≥85°C (°C):	-40 / - / +105
Storage temperature (°C):	-50 / - / +130
Cooling:	Free air convection

BLECHBEARBEITUNG MAGNETISCHE ABSCHIRMUNGEN INDUKTIVITÄTEN STROMVERSORGUNGEN

V1.1/0318 • Stand 0318 • Irrtümer vorbehalten • Copyright © 2018 by HAUFE GmbH & Co. KG

TEMPERATURE DERATING GRAPHS

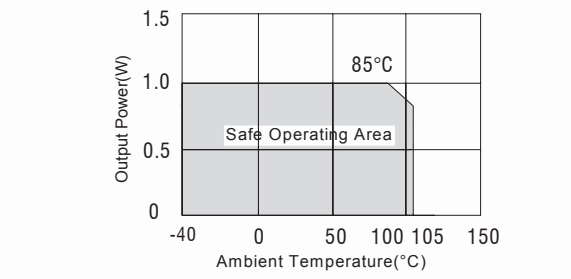

TOLERANCE ENVELOPES

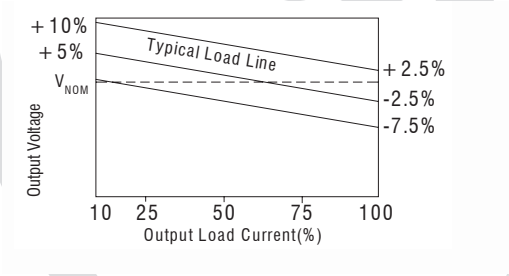

MECHANICAL DIMENSION

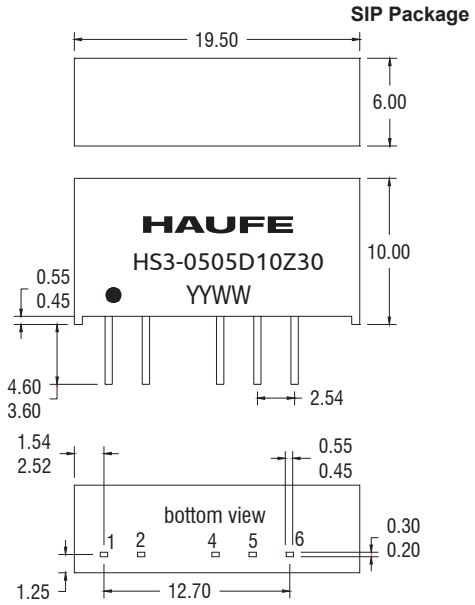

All dimensions in mm ±0.25mm. All pins on a 2.54mm pitch and within ±0.25mm of true position. Weight: 2.1g (DIP)

PIN CONNECTIONS

7 PIN SIP	
Pin	Function
1	+Vin
2	-Vin
4	-Vout
5	OV
6	+Vout

RECOMMENDED FOOTPRINT DETAILS

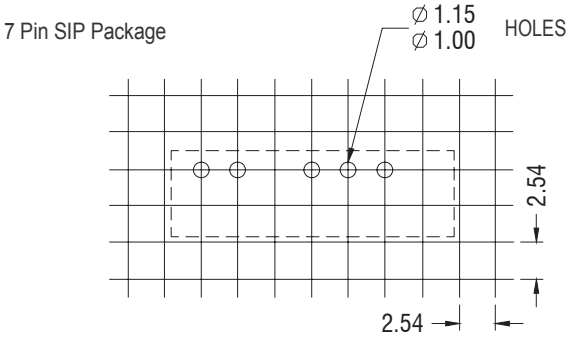

RoHS COMPLIANCE INFORMATION

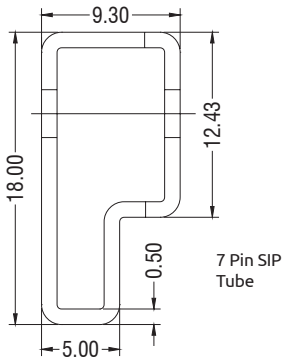

SOLDERING INFORMATION

This series is compatible with RoHS soldering systems with a peak wave solder temperature of 300°C for 10 seconds. These series are backward compatible with Sn/Pb soldering systems.

V1.1/0318 • Stand 0318 • Irrtümer vorbehalten • Copyright © 2018 by HAUFE GmbH & Co. KG

BLECHBEARBEITUNG
MAGNETISCHE ABSCHIRMUNGEN
INDUKTIVITÄTEN
STROMVERSORGUNGEN

HD3 - 1W Isolated Dual Output DC/DC Converters

HAUFE®
„PRECISION FOR YOUR SUCCESS"
... since 1947

The HD3 series are miniature, isolated 1W DC/DC converters in a SIP package. They offer the ideal solution in many space critical applications for board level power distribution. The internal SMD construction makes it possible to offer a product with high performance at low cost. The series offers smaller size, improved efficiency, lower output ripple noise and 3KVDC isolation.

FEATURES:

- *RoHS compliant*
- *Efficiency up to 81%*
- *Power density up to 0.86W/cm³*
- *Dual output from a single input rail*
- *UL 94V-0 package material*
- *No heat sink required*
- *3KVDC isolation*
- *Industry standard pinout*
- *Power sharing on output*
- *Input voltage: 5V, 12V, 15V, 24V , 48V*
- *Output voltage: ±5V, ±9V, ±12V, ±15V , ±24V*
- *Operating temperature :-40°C to +105°C*
- *Optional: Continuous short circuit protection*

H-Model	Nominal Input Voltage (V)	Output Voltage (V)	Output Current (Max./Min) (mA)	Efficiency (%)	Package Style
HD3-0505D10Z30	5	±5	±100/±10	67	DIP7
HD3-0509D10Z30	5	±9	±56/±5.6	76	DIP7
HD3-0512D10Z30	5	±12	±43/±4.3	79	DIP7
HD3-0515D10Z30	5	±15	±33/±3.3	78	DIP7
HD3-0524D10Z30	5	±24	±21/±2.1	81	DIP7
HD3-1205D10Z30	12	±5	±100/±10	68	DIP7
HD3-1209D10Z30	12	±9	±56/±5.6	74	DIP7
HD3-1212D10Z30	12	±12	±43/±4.3	77	DIP7
HD3-1215D10Z30	12	±15	±33/±3.3	75	DIP7
HD3-1505D10Z30	15	±5	±100/±10	71	DIP7
HD3-1512D10Z30	15	±12	±43/±4.3	77	DIP7
HD3-1515D10Z30	15	±15	±33/±3.3	80	DIP7
HD3-2405D10Z30	24	±5	±100/±10	69	DIP7
HD3-2409D10Z30	24	±9	±56/±5.6	78	DIP7
HD3-2412D10Z30	24	±12	±42/±4.2	81	DIP7
HD3-2415D10Z30	24	±15	±34/±3.4	80	DIP7
HD3-4805D10Z30	48	±5	±100/±10	70	DIP7
HD3-4809D10Z30	48	±9	±56/±5.6	79	DIP7
HD3-4812D10Z30	48	±12	±43/±4.3	79	DIP7
HD3-4815D10Z30	48	±15	±33/±3.3	79	DIP7

Package Unit: 25

The models listed above is just for standard type. If you need the special specification product, please contact our specialists: **sales@haufe-power.de**

Add suffix "P" for continous short circuit protection e.g. „HD3-0305D10Z30P".

The information and specifications contained in this data sheet are believed to be correct at time of publication. However, HAUFE GmbH & Co. KG accepts no responsibility for consequences arising from printing errors or inaccuracies. Specifications are subject to change without notice. No rights under any patent accompany the sale of any such product(s) or information contained herein.

V1.1/0318 • Stand 0318 • Irrtümer vorbehalten • Copyright © 2018 by HAUFE GmbH & Co. KG

BLECHBEARBEITUNG MAGNETISCHE ABSCHIRMUNGEN INDUKTIVITÄTEN STROMVERSORGUNGEN

HAUFE GmbH & Co. KG • Weilburger Str. 14 • 61250 Usingen • Tel.: +49 6081 9153-0 • info@haufe-uebertrager.de

INPUT CHARACTERISTICS (Min./Typ./Max.):	
Voltage range 3.3V input types (V):	2.9 / 3.3 / 3.6
Voltage range 5V input types (V):	4.5 / 5 / 5.5
Voltage range 12V input types (V) :	10.7 / 12 / 13.1
Voltage range 15V input types (V):	13.5 / 15 / 16.5
Voltage range 24V input types V):	22 / 24 / 27
Voltage range 48V input types (V):	44 / 48 / 53

ISOLATION CHARACTERISTICS:	
Isolation test voltage (VDC):	3000 / - / - (Tested for 1 second)
Resistance (Viso = 1000 VDC) (GΩ):	1 / - / -

ABSOLUTE MAXIMUM RATINGS:	
Lead temperature 1.5mm from case for 10 seconds:	300°C
Internal power dissipation :	450mW
Input voltage Vin:	7V / 15V / 18V / 28V / 54V (HD3D variants: 05 / 12 / 15 / 24 / 28 / 48 / 54V)
All specs typ. at TA-25°C, nominal input voltage and rated output current unless otherwise specified	

OUTPUT CHRACTERISTICS (Min. / Typ. / Max.):	
Rated Power TA= -40°C to 85°C (W):	- / - / 1
Voltage Set Point Accuracy (%):	See tolerance envelope
Line regulation High VIN to low VIN (%):	- / 1 / 1.2
Load Regulation (***) 5V output types (%):	- / 10 / 13 (5V & 12V input) - / 6 / 10 (15V input) - / - / 14 (24V-48V input)
Load Regulation (***) 9V output (%):	- / 9 / 10 (5V & 12V input)
Load Regulation (***) 12V output (%):	- /7 / 8 (5V & 12V input) - / 3 / 4 (15V input)
Load Regulation (*** 15V output (%):	- / 6 / 7 (5V & 12V input) - / 3 / 4 (15V input)
Load Regulation (***) All other types (output) (%):	- / - / 12
(= 10% load to rated load)***	
Output Characteristics Notes:	
All specifications typical at TA=25°C, nominal input voltage and rated output current unless otherwise specified.	

GENERAL CHARACTERISTICS (Min. / Typ. / Max.)	
Switching frequency 3.3V input (kHz):	- / 95 / -
Switching frequency 5V input (kHz):	- / 110 / -
Switching frequency 12V input (kHz):	- / 130 / -
Switching frequency 15V input (kHz):	- / 90 / -
Switching frequency 24V input (kHz):	- / 110 / -
Switching frequency 48V input (kHz):	- / 110 / -

TEMPERATUR CHARACTERISTICS (Min. / Typ. / Max.)	
Derating if the temperature is ≥85°C (°C):	-40 / - / +105
Storage temperature (°C):	-50 / - / +130
Cooling:	Free air convection

BLECHBEARBEITUNG MAGNETISCHE ABSCHIRMUNGEN INDUKTIVITÄTEN STROMVERSORGUNGEN

V1.1/0318 • Stand 0318 • Irrtümer vorbehalten • Copyright © 2018 by HAUFE GmbH & Co. KG

TEMPERATURE DERATING GRAPHS

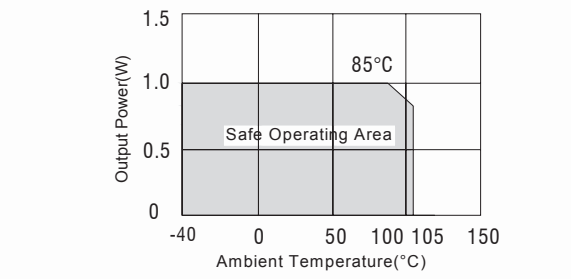

TOLERANCE ENVELOPES

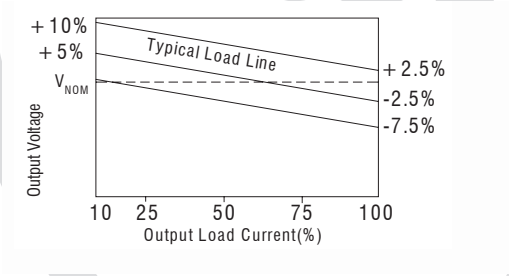

MECHANICAL DIMENSION

DIP Package

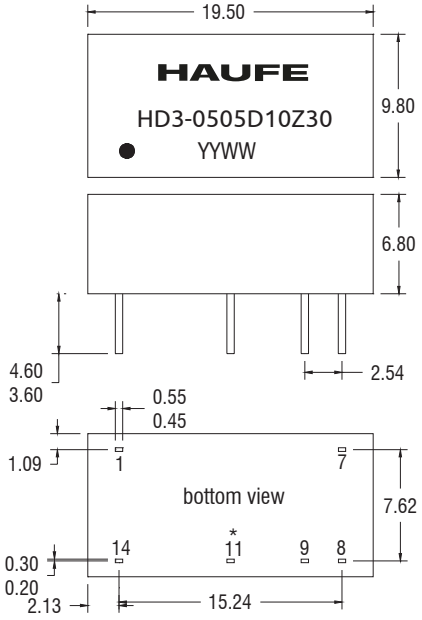

All dimensions in mm ±0.25mm. All pins on a 2.54mm pitch and within ±0.25mm of true position. Weight: 2.1g (DIP)

PIN CONNECTIONS

14 PIN DIP	
Pin	Function
1	-Vin
7	NC
8	OV
9	+Vout
11*	-Vout
14	+Vin

RECOMMENDED FOOTPRINT DETAILS

14 Pin DIP Package

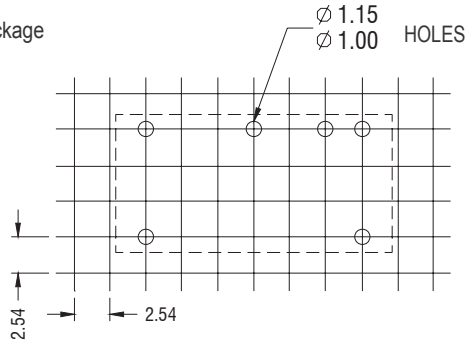

RoHS COMPLIANCE INFORMATION

14Pin DIP Tube

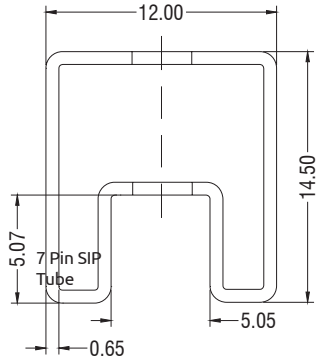

Tube length (14 Pin DIP) : 520mm±2mm.

Tube Quantity : 25PCS

SOLDERING INFORMATION

This series is compatible with RoHS soldering systems with a peak wave solder temperature of 300°C for 10 seconds. These series are backward compatible with Sn/Pb soldering systems.

V1.1/0318 • Stand 0318 • Irrtümer vorbehalten • Copyright © 2018 by HAUFE GmbH & Co. KG

INDUKTIVITÄTEN
STROMVERSORGUNGEN
BLECHBEARBEITUNG
MAGNETISCHE ABSCHIRMUNGEN

HS4 - 2W 3KVDC Isolated Single Output DC/DC Converters

HAUFE®
„PRECISION FOR YOUR SUCCESS"
... since 1947

The HS4 series are miniature, isolated 2W DC/DC converters in a SIP package. They offer the ideal solution in many space critical applications for board level power distribution. The internal SMD construction makes it possible to offer a product with high performance at low cost. The series offers smaller size, improved efficiency, lower output ripple noise.

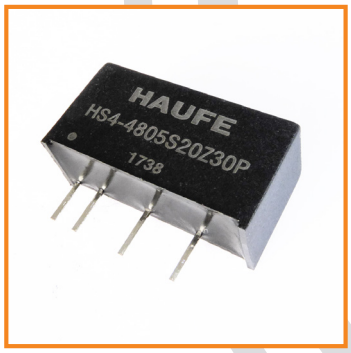

FEATURES:

- *RoHS compliant*
- *UL 94V-0 package material*
- *Input voltage: 3.3V, 5V, 12V,15V,24V,48V*
- *Efficiency up to 83%*
- *Industry standard pinout*
- *Output voltage: 3.3V,5V, 9V, 12V, 15V, 24V*
- *Operating temperature :-40ºC to +105ºC*
- *3KVDC isolation*
- *Internal SMD construction*
- *Optional: Continuous short circuit protection*

H-Model	Nominal Input Voltage (V)	Output Voltage (V)	Output Current (Max./Min) (mA)	Load Regulation (Max.) (%)	Efficiency (%)	Package Style
HS4-0305S20Z30	3,3	5	400/40	7,4	73	SIP7
HS4-0503S20Z30	5	3,3	606/60.6	8	75	SIP7
HS4-0505S20Z30	5	5	400/40	7,4	77	SIP7
HS4-0509S20Z30	5	9	222/22.2	6,1	81	SIP7
HS4-0512S20Z30	5	12	167/16.7	5,1	82	SIP7
HS4-0515S20Z30	5	15	133/13.3	4,5	82	SIP7
HS4-0524S20Z30	5	24	83/8.3	4,5	82	SIP7
HS4-1203S20Z30	12	3,3	606/60.6	8	75	SIP7
HS4-1205S20Z30	12	5	400/40	4,8	77	SIP7
HS4-1209S20Z30	12	9	222/22.2	3,2	82	SIP7
HS4-1212S20Z30	12	12	167/16.7	2,9	83	SIP7
HS4-1215S20Z30	12	15	133/13.3	2,5	83	SIP7
HS4-1224S20Z30	12	24	83/8.3	4,5	82	SIP7
HS4-1505S20Z30	15	5	400/40	7,4	75	SIP7
HS4-1515S20Z30	15	15	133/13.3	2,5	75	SIP7
HS4-2403S20Z30	24	3,3	400/40	7,4	71	SIP7
HS4-2405S20Z30	24	5	400/40	6,5	77	SIP7
HS4-2409S20Z30	24	9	222/22.2	3,2	77	SIP7
HS4-2412S20Z30	24	12	167/16.7	2,9	79	SIP7
HS4-2415S20Z30	24	15	133/13.3	2,5	79	SIP7
HS4-2424S20Z30	24	24	83/8.3	4,5	82	SIP7
HS4-4805S20Z30	48	5	400/40	6,5	77	SIP7
HS4-4812S20Z30	48	12	167/16.7	2,9	79	SIP7

The models listed above is just for standard type. If you need the special specification product, please contact our specialists: **sales@haufe-power.de** **Package Unit: 25**

Add suffix "P" for continous short circuit protection e.g. „HS4-0305S20Z30P".

The information and specifications contained in this data sheet are believed to be correct at time of publication. However, HAUFE GmbH & Co. KG accepts no responsibility for consequences arising from printing errors or inaccuracies. Specifications are subject to change without notice. No rights under any patent accompany the sale of any such product(s) or information contained herein.

V1.1/0318 • Stand 0318 • Irrtümer vorbehalten • Copyright © 2018 by HAUFE GmbH & Co. KG

BLECHBEARBEITUNG MAGNETISCHE ABSCHIRMUNGEN INDUKTIVITÄTEN STROMVERSORGUNGEN

HAUFE GmbH & Co. KG • Weilburger Str. 14 • 61250 Usingen • Tel.: +49 6081 9153-0 • info@haufe-uebertrager.de

INPUT CHARACTERISTICS (Min./Typ./Max.):	
Voltage range 3.3V input types (V):	2.9 / 3.3 / 3.7
Voltage range 5V input types (V):	4.5 / 5 / 5.6
Voltage range 12V input types (V) :	11 / 12 / 13.2
Voltage range 15V input types (V):	13.4 / 15 / 16.4
Voltage range 24V input types V):	21.6 / 24 / 26.4
Voltage range 48V input types (V):	43 / 48 / 53
Reflected ripple current (mA p-p):	- / 8 / 15

ISOLATION CHARACTERISTICS:	
Isolation test voltage (VDC):	3000 / - / -(Tested for 1 second)
Resistance (Viso = 1000 VDC) (GΩ):	1 / - / -

ABSOLUTE MAXIMUM RATINGS:	
Lead temperature 1.5mm from case for 10 seconds:	300°C
Internal power dissipation :	700mW
Input voltage Vin:	03=5.5V / 05=7V / 12=15V / 15=18V / 24=28V / 48=54V

OUTPUT CHRACTERISTICS (Min. / Typ. / Max.):	
Rated Power TA= -40°C to 85°C (W):	- / - / 2
Voltage Set Point Accuracy (%):	See tolerance envelope
Line regulation High VIN to low VIN (%):	- / 1.0 / 1.2

GENERAL CHARACTERISTICS (Min. / Typ. / Max.)	
Switching frequency (all input types) (kHz):	- / 65 / -

TEMPERATUR CHARACTERISTICS (Min. / Typ. / Max.)	
Derating if the temperature is ≥85°C (°C):	-40 / - / +105
Storage temperature (°C):	-50 / - / +150
Case temperature above ambient. 5V output (°C):	- / - / 32
Case temperature above ambient. 12V output (°C:	- / - / 27
Case temperature above ambient. All other output (°C):	- / - / 25
Cooling:	Free air convection

TEMPERATURE DERATING GRAPHS

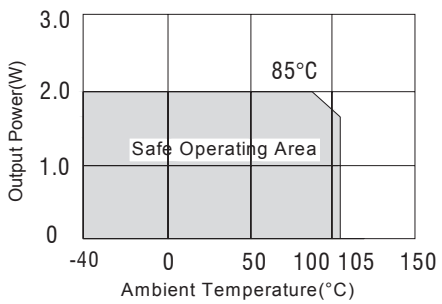

TOLERANCE ENVELOPES

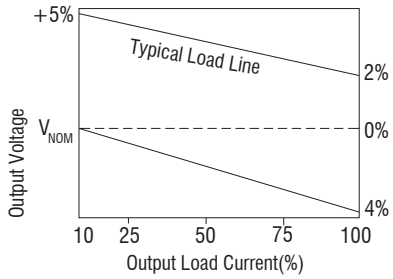

V1.1/0318 • Stand 0318 • Irrtümer vorbehalten • Copyright © 2018 by HAUFE GmbH & Co. KG

INDUKTIVITÄTEN
STROMVERSORGUNGEN
BLECHBEARBEITUNG
MAGNETISCHE ABSCHIRMUNGEN

EFFICIENCY VS LOAD

5V Input Voltage

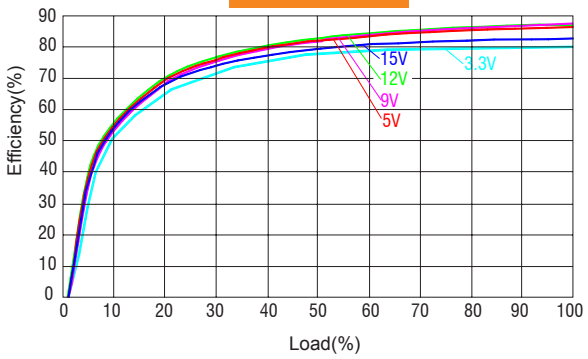

12V Input Voltage

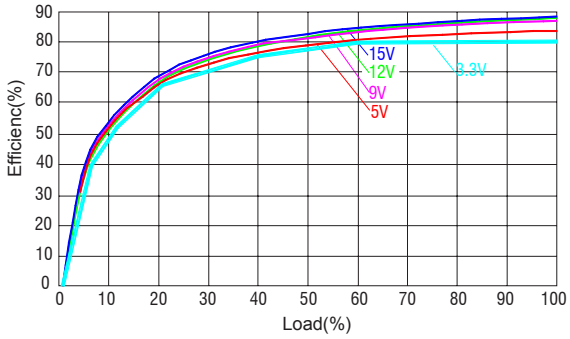

MECHANICAL DIMENSION

SIP Package

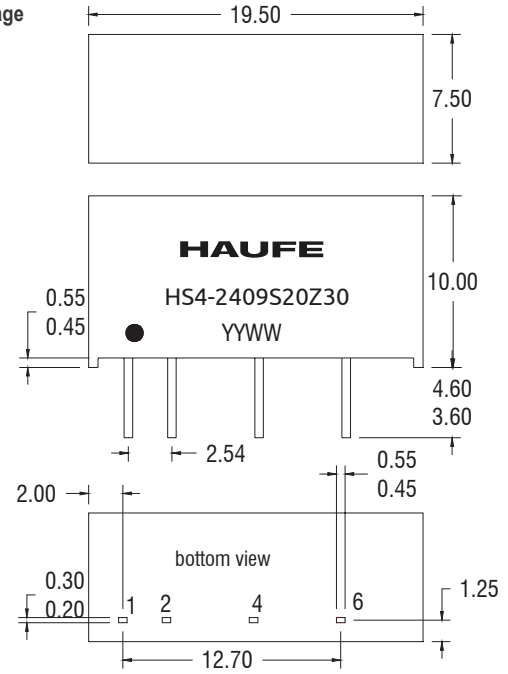

All dimensions in mm ±0.25mm . All pins on a 2.54mmpitch and within ±0.25mm of true position.

Weight: 2.8g

PIN CONNECTIONS

7 PIN SIP	
Pin	Function
1	+Vin
2	-Vin
4	-Vout
6	+Vout

SOLDERING INFORMATION

This series is compatible with RoHS soldering systems with a peak wave solder temperature of 300°C for 10 seconds. These series are backward compatible with Sn/Pb soldering systems.

RECOMMENDED FOOTPRINT DETAILS

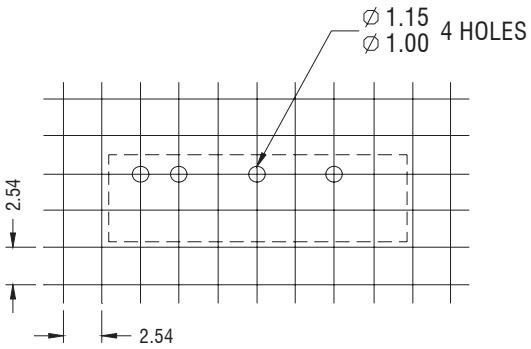

Unless otherwise stated all dimensions in mm ±0.5mm.

TUBE OUTLINE DIMENSIONS

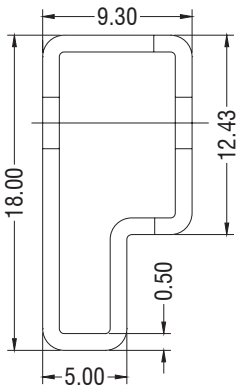

Unless otherwise stated all dimensions in mm ±0.5mm.

Tube length : 520mm ±2mm.

Tube Quantity : 25PCS

INDUKTIVITÄTEN
STROMVERSORGUNGEN
BLECHBEARBEITUNG
MAGNETISCHE ABSCHIRMUNGEN

V1.1/0318 • Stand 0318 • Irrtümer vorbehalten • Copyright © 2018 by HAUFE GmbH & Co. KG

HS4 - 2W 3KVDC Isolated Dual Output DC/DC Converters

HAUFE®
„PRECISION FOR YOUR SUCCESS"
... since 1947

The HS4-XXYYD20Z30 series are miniature, isolated 2W DC/DC converters in a SIP package. They offer the ideal solution in many space critical applications for board level power distribution. The internal SMD construction makes it possible to offer a product with high performance at low cost.

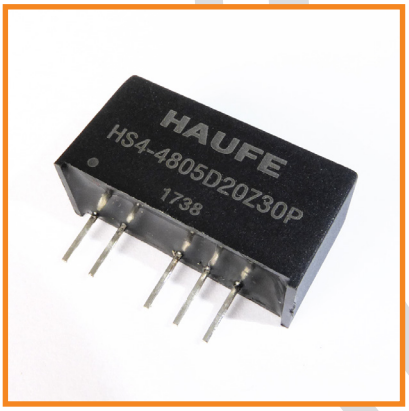

FEATURES:

- *RoHS compliant*
- *Power sharing on output*
- *Input voltage: 5V,12V,15V, 24V, 48V*
- *Efficiency up to 86%*
- *Dual output from a single input rail*
- *3KVDC isolation*
- *Output voltage: ±5V,±9V,±12V, ±15V,±24V*
- *Power density up to 1.44W/cm³*
- *UL 94V-0 package material*
- *Industry standard pinout*
- *Operating temperature: -40°C to +105°C*
- *Optional: Continuous short circuit protection*

H-Model	Nominal Input Voltage (V)	Output Voltage (V)	Output Current (Max./Min) (mA)	Efficiency (%)	Package Style
HS4-0505D20Z30	5	±5	±200/±20	80	SIP7
HS4-0509D20Z30	5	±9	±110/±11	80	SIP7
HS4-0512D20Z30	5	±12	±84/±8.4	82	SIP7
HS4-0515D20Z30	5	±15	±68/±6.8	83	SIP7
HS4-0524D20Z30	5	±24	±42/±4.2	84	SIP7
HS4-1205D20Z30	12	±5	±200/±20	80	SIP7
HS4-1209D20Z30	12	±9	±110/±11	83	SIP7
HS4-1212D20Z30	12	±12	±84/±8.4	84	SIP7
HS4-1215D20Z30	12	±15	±68/±6.8	86	SIP7
HS4-1224D20Z30	12	±24	±42/±4.2	85	SIP7
HS4-1505D20Z30	15	±5	±200/±20	80	SIP7
HS4-1515D20Z30	15	±15	±68/±6.8	86	SIP7
HS4-2405D20Z30	24	±5	±200/±20	82	SIP7
HS4-2409D20Z30	24	±9	±110/±11	85	SIP7
HS4-2412D20Z30	24	±12	±84/±8.4	85	SIP7
HS4-2415D20Z30	24	±15	±68/±6.8	85	SIP7
HS4-2424D20Z30	24	±24	±42/±4.2	85	SIP7
HS4-4805D20Z30	48	±5	±200/±20	82	SIP7
HS4-4809D20Z30	48	±9	±110/±11	83	SIP7
HS4-4812D20Z30	48	±12	±84/±8.4	85	SIP7
HS4-4815D20Z30	48	±15	±68/±6.8	84	SIP7

Package Unit: 25

Add suffix "P" for continous short circuit protection e.g. „HS4-0505D20Z30P".

The models listed above is just for standard type. If you need the special specification product, please contact our specialists: **sales@haufe-power.de**

The information and specifications contained in this data sheet are believed to be correct at time of publication. However, HAUFE GmbH & Co. KG accepts no responsibility for consequences arising from printing errors or inaccuracies. Specifications are subject to change without notice. No rights under any patent accompany the sale of any such product(s) or information contained herein.

V1.1/0318 • Stand 0318 • Irrtümer vorbehalten • Copyright © 2018 by HAUFE GmbH & Co. KG

BLECHBEARBEITUNG MAGNETISCHE ABSCHIRMUNGEN INDUKTIVITÄTEN STROMVERSORGUNGEN

HAUFE GmbH & Co. KG • Weilburger Str. 14 • 61250 Usingen • Tel.: +49 6081 9153-0 • info@haufe-uebertrager.de

INPUT CHARACTERISTICS (Min./Typ./Max.):	
Voltage range 3.3V input types (V):	2.9 / 3.3 / 3.6
Voltage range 5V input types (V):	4.5 / 5 / 5.5
Voltage range 12V input types (V) :	11 / 12 / 13
Voltage range 24V input types V):	22 / 24 / 26
Voltage range 48V input types (V):	43 / 48 / 53
ISOLATION CHARACTERISTICS:	
Isolation test voltage (VDC):	3000 / - / - (flash tested for 1 sec.)
Resistance (Viso = 1000 VDC) (GΩ):	1 / - / -
ABSOLUTE MAXIMUM RATINGS:	
Short-circuit protection:	1 sec.
Lead temperature 1.5mm from case for 10 seconds:	300°C
Internal power dissipation :	300mW
Input voltage Vin:	03= 5.5V / 05=7V / 12=15V / 15=18V / 24=28V / 48=54V
OUTPUT CHRACTERISTICS (Min. / Typ. / Max.):	
Rated Power TA= -40°C to 85°C (W):	- / - / 2
Voltage Set Point Accuracy (%):	0505= -5 min. / 7.5 max all other types= -5 min. / 5 max
Line regulation High VIN to low VIN (%%):	- / 1.2 / -
Load Regulation (***) 5V output types (%):	- / 10 / -
Load Regulation (***) 9V output (%):	- / 10 / -
Load Regulation (***) 12V output (%):	- / 10 / -
Load Regulation (*** 15V output (%):	- / 10 / -
(= 10% load to rated load)***	
GENERAL CHARACTERISTICS (Min. / Typ. / Max.)	
Switching frequency 3.3V input (kHz):	- / 90 / -
Switching frequency 5V input (kHz):	- / 90 / -
Switching frequency 12V input (kHz):	- / 90 / -
Switching frequency 15V input (kHz):	- / 90 / -
Switching frequency 24V input (kHz):	- / 90 / -
Switching frequency 48V input (kHz):	- / 90 / -
TEMPERATUR CHARACTERISTICS (Min. / Typ. / Max.)	
Derating if the temperature is ≥85°C (°C):	-40 / - / +105
Storage temperature (°C):	-50 / - / +130
Case temperature above ambient. 5V output (°C):	- / 33 / -
Case temperature above ambient. 12V output (°C:	- / 27 / -)
Cooling:	Free air convection

BLECHBEARBEITUNG
MAGNETISCHE ABSCHIRMUNGEN
INDUKTIVITÄTEN
STROMVERSORGUNGEN

V1.1/0318 • Stand 0318 • Irrtümer vorbehalten • Copyright © 2018 by HAUFE GmbH & Co. KG

TEMPERATURE DERATING GRAPHS

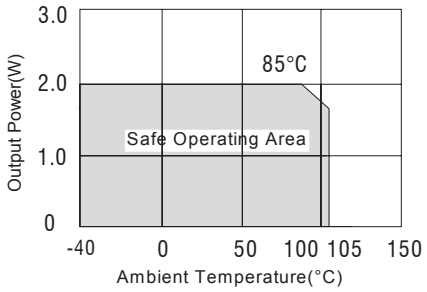

TOLERANCE ENVELOPES

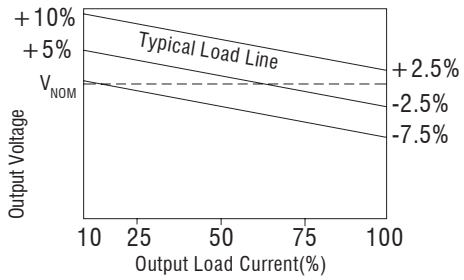

MECHANICAL DIMENSION

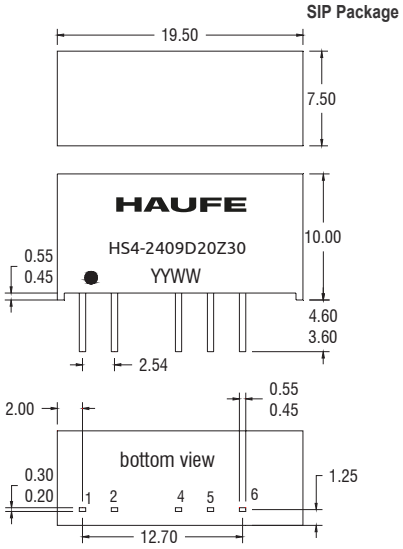

All dimensions in mm ±0.25mm. All pins on a 2.54mm pitch and within ±0.25mm of true position. Weight: 2.76 (SIP)

RECOMMENDED FOOTPRINT DETAILS

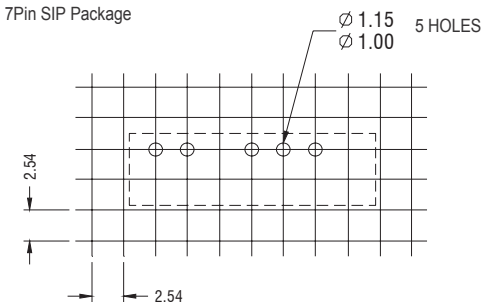

PIN CONNECTIONS

7 PIN SIP	
Pin	Function
1	+Vin
2	-Vin
4	-Vout
5	OV
6	+Vout

SOLDERING INFORMATION

This series is compatible with RoHS soldering systems with a peak wave solder temperature of 300°C for 10 seconds. These series are backward compatible with Sn/Pb soldering systems.

TUBE OUTLINE DIMENSIONS

7Pin SIPTube

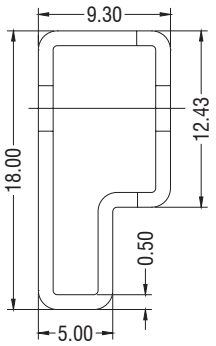

Unless otherwise stated all dimension in mm ±0.5mm.
Tube length (7 Pin SIP): 520mm ±2mm.

V1.1/0318 • Stand 0318 • Irrtümer vorbehalten • Copyright © 2018 by HAUFE GmbH & Co. KG

BLECHBEARBEITUNG
MAGNETISCHE ABSCHIRMUNGEN
INDUKTIVITÄTEN
STROMVERSORGUNGEN

HS5-XXYYRS10Z30 series are specially designed for 3KVDC isolation & regulated single and output application, the input voltage range within ±5%, regulated output with very low ripple noise. short circuit protection

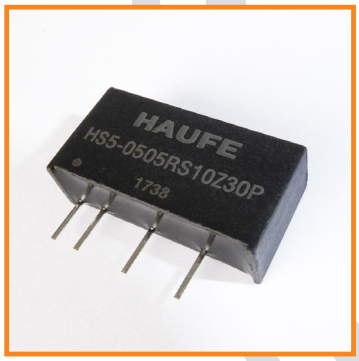

FEATURES:

- *SIP package*
- *Regulated single output*
- *Low ripple noise*
- *Internal SMD construction*
- *3000VDC Isolation*
- *Small footprint*
- *Input voltage: 3.3V,5V,12V,15V,24V*
- *Operating temperature -40°C to +105°C*
- *RoHS Compliance*
- *No external component required*
- *Output voltage: 3.3V,5V,9V,12V,15V,24V*
- *Optional: Continuous short circuit protection*

H-Model	Nominal Input Voltage (V)	Input Voltage (V) Range	Output Voltage (V)	Output Current (Max./Min) (mA)	Efficiency (%)	Package Style
HS5-0303RS10Z30	3.3	3.13~3.47	3.3	303 / 30	66	SIP7
HS5-0305RS10Z30	3.3	3.13~3.47	5	200 / 20	66	SIP7
HS5-0503RS10Z30	5	4.75~5.25	3.3	303 / 30	66	SIP7
HS5-0505RS07Z30	5	4.75~5.25	5	150 / 15	68	SIP7
HS5-0505RS10Z30	5	4.75~5.25	5	200 / 20	66	SIP7
HS5-0509RS10Z30	5	4.75~5.25	9	111 / 12	70	SIP7
HS5-0512RS10Z30	5	4.75~5.25	12	83 / 9	71	SIP7
HS5-0515RS10Z30	5	4.75~5.25	15	67 / 7	73	SIP7
HS5-0524RS10Z30	5	4.75~5.25	24	42 / 5	68	SIP7
HS5-1205RS07Z30	12	11.4~12.6	5	150 / 15	70	SIP7
HS5-1205RS10Z30	12	11.4~12.6	5	200 / 20	67	SIP7
HS5-1209RS10Z30	12	11.4~12.6	9	111 / 12	72	SIP7
HS5-1212RS10Z30	12	11.4~12.6	12	83 / 9	70	SIP7
HS5-1215RS10Z30	12	11.4~12.6	15	67 / 7	74	SIP7
HS5-1224RS10Z30	12	11.4~12.6	24	42 / 5	68	SIP7
HS5-1505RS07Z30	15	14.25~15.75	5	150 / 15	68	SIP7
HS5-1505RS10Z30	15	14.25~15.75	5	200 / 20	67	SIP7
HS5-1509RS10Z30	15	14.25~15.75	9	111 / 12	71	SIP7
HS5-1512RS10Z30	15	14.25~15.75	12	83 / 9	71	SIP7
HS5-1515RS10Z30	15	14.25~15.75	15	67 / 7	72	SIP7
HS5-1524RS10Z30	15	14.25~15.75	24	42 / 5	68	SIP7
HS5-2405RS07Z30	24	22.8~25.2	5	150 / 15	68	SIP7
HS5-2405RS10Z30	24	22.8~25.2	5	200 / 20	68	SIP7
HS5-2409RS10Z30	24	22.8~25.2	9	111 / 12	68	SIP7
HS5-2412RS10Z30	24	22.8~25.2	12	83 / 9	73	SIP7
HS5-2415RS10Z30	24	22.8~25.2	15	67 / 7	75	SIP7
HS5-2424RS10Z30	24	22.8~25.2	24	42 / 5	68	SIP7

Package Unit: 25

Add suffix "P" for continous short circuit protection e.g. „HS5-0305RS10Z30P".

The models listed above is just for standard type. If you need the special specification product, please contact our specialists: **sales@haufe-power.de**

0,75W-version

The information and specifications contained in this data sheet are believed to be correct at time of publication. However, HAUFE GmbH & Co. KG accepts no responsibility for consequences arising from printing errors or inaccuracies. Specifications are subject to change without notice. No rights under any patent accompany the sale of any such product(s) or information contained herein.

V1.1/0318 • Stand 0318 • Irrtümer vorbehalten • Copyright © 2018 by HAUFE GmbH & Co. KG

BLECHBEARBEITUNG MAGNETISCHE ABSCHIRMUNGEN INDUKTIVITÄTEN STROMVERSORGUNGEN

ISOLATION CHARACTERISTICS:	
Isolation test voltage (VDC):	3000 / - / - (tested for 1 minute and 1mA max.)
Isolation resistance (Viso = 1000 VDC) (GΩ):	1 / - / -
ABSOLUTE MAXIMUM RATINGS:	
Short-circuit protection:	1 sec. (HS5-0505RS05) (others continuous)
OUTPUT CHRACTERISTICS (Min. / Typ. / Max.):	
Output power (W):	0.1 / - / 1
Output voltage accuracy (100% full load) (%):	- / - / ±3
Temperature drift (Vout) (%/°C):	- / - / ±0.03 (100% full load)
Ripple 20 MHz bandwidth (mv p-p):	- / 10 / 20
Noise 20MHz bandwidth (mv p-p):	- / 50 / 75
Line regulation for Vin change of ±5% (%):	- / - / ±0.25
Load regulation 10% to 100% load (%):	- / - / ±1
GENERAL CHARACTERISTICS (Min. / Typ. / Max.)	
Switching frequency 100% load, nominal input (kHz):	- / 100 / -
MTBF (K hours):	3500 / - / -
Weight (g):	2.1
Case material:	Plastic (UL94-V0)
TEMPERATUR CHARACTERISTICS (Min. / Typ. / Max.)	
Storage humidity, test condition (%):	- / - / 95
Operating temperature (°C):	-40 / - /+ 105 Derating if the temperature ≥85°C
Storage temperature (°C):	-55 / - / +125
Temp. Rise at full load (°C):	- / +15 / +25
Lead temperature (°C):	- / - / +300
Cooling:	Free air convection

TEMPERATURE DERATING GRAPHS

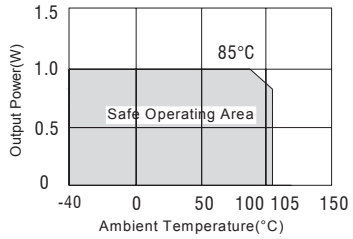

RECOMMENDED FOOTPRINT DETAILS

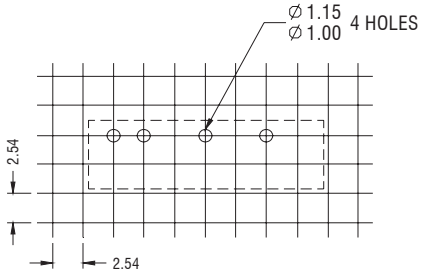

MECHANICAL DIMENSION

SIP Package

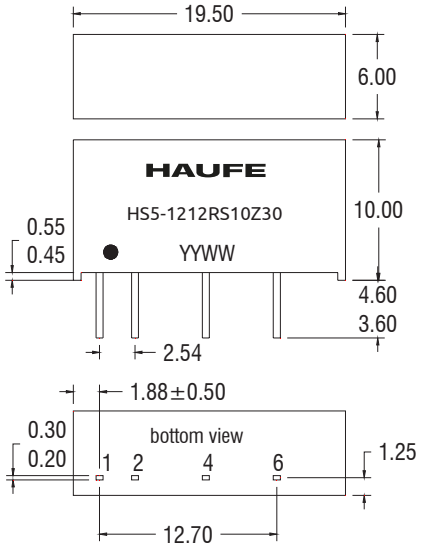

All dimensions in mm ±0.25 mm. All pins on a 2.54mm pitch. Weight: 2.1g

PIN CONNECTIONS

7 PIN SIP	
Pin	Function
1	+Vin
2	-Vin
4	-Vout
6	+Vout

TUBE OUTLINE DIMENSIONS

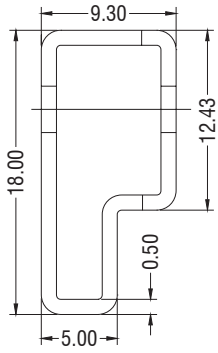

V1.1/0318 • Stand 0318 • Irrtümer vorbehalten • Copyright © 2018 by HAUFE GmbH & Co. KG

INDUKTIVITÄTEN
STROMVERSORGUNGEN
BLECHBEARBEITUNG
MAGNETISCHE ABSCHIRMUNGEN

The HS5-XXYYRD10Z30 series is specially designed for 3KVDC isolation & regulated dual output applications, the input voltage ranges within ±5%, 3 KVDC isolation and regulated output with very low ripple noise.

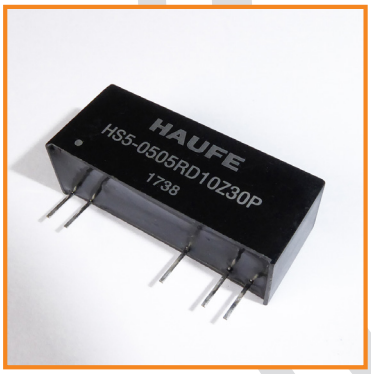

FEATURES:

- *RoHS compliant*
- *Operating temperature: -40°C to +105°C*
- *No external component required*
- *Input voltage: 5V,12V, 24V*
- *Output voltage:±5V, ±9V,±12V,±15V*
- *Small footprint*
- *3KVDC isolation*
- *Internal SMD construction*
- *IIndustry standard pinout*
- *Continuous short circuit protection*

H-Model	Nominal Input Voltage (VDC)	Input voltage range	Output Voltage (V)	Output Current (Max./Min) (mA)	Efficiency (%)	Package Style
HS5-0505RD10Z30	5	4.75-5.25	±5	±100/±10	54	SIP
HS5-0509RD10Z30	5	4.75-5.25	±9	±56/±6	63	SIP
HS5-0512RD10Z30	5	4.75-5.25	±12	±42/±5	63	SIP
HS5-0515RD10Z30	5	4.75-5.25	±15	±33/±4	65	SIP
HS5-1205RD10Z30	12	11.4-12.6	±5	±100/±10	56	SIP
HS5-1209RD10Z30	12	11.4-12.6	±9	±56/±6	62	SIP
HS5-1212RD10Z30	12	11.4-12.6	±12	±42/±5	65	SIP
HS5-1215RD10Z30	12	11.4-12.6	±15	±33/±4	66	SIP
HS5-2405RD10Z30	24	22.8-25.2	±5	±100/±10	54	SIP
HS5-2409RD10Z30	24	22.8-25.2	±9	±56/±6	62	SIP
HS5-2412RD10Z30	24	22.8-25.2	±12	±42/±5	64	SIP
HS5-2415RD10Z30	24	22.8-25.2	±15	±33/±4	66	SIP

Package Unit: 15

Add suffix "P" for continous short circuit protection e.g. „HS5-0505RD10Z30P".

The models listed above is just for standard type. If you need the special specification product, please contact our specialists: **sales@haufe-power.de**

V1.1/0318 • Stand 0318 • Irrtümer vorbehalten • Copyright © 2018 by HAUFE GmbH & Co. KG

The information and specifications contained in this data sheet are believed to be correct at time of publication. However, HAUFE GmbH & Co. KG accepts no responsibility for consequences arising from printing errors or inaccuracies. Specifications are subject to change without notice. No rights under any patent accompany the sale of any such product(s) or information contained herein.

BLECHBEARBEITUNG
MAGNETISCHE ABSCHIRMUNGEN
INDUKTIVITÄTEN
STROMVERSORGUNGEN

OUTPUT CHRACTERISTICS (Min. / Typ. / Max.):	
Output power (W):	0.1 / - / 1
Line regulation for Vin change of ±5% (%):	- / - / ±0.25
Load regulation 10% to 100% full load (%):	- / - / ±1
Output voltage accuracy 100% full load (%):	- / - / ±3
Temperature drift 100% full load (% °C):	- / - / 0.03
Output ripple 20MHz Bandwidth (Mvp-p):	- / 10 / 20
Output noise 20MHz Bandwidth (Mvp-p):	- / 50 / 100

COMMON SPECIFICATIONS (Min./Typ./Max.):	
Storage humidity range (%):	- / - / 95
Operating temperature (°C) /Derating if	
the temperature is >= 85 °C:	-40 / - / 105
Storage temperature (°C):	-55 / - / 125
Temp. rise at full load (°C):	- / 20 / 30
Lead temperature 1.5 mm from case/10 sec.: (°C):	- / - / 300
Cooling:	Free air convection
Case material:	Plastic (UL94-V0)
Short circuit protection (S):	- / - / 1
MFTB (K hours):	3500 / - / -
Weight (g):	5.2

ISOLATION CHARACTERISTICS:	
Isolation test voltage (VDC):	3000 / - / - (1 sec. /1mA max)
Isolation Resistance (Test at 1000 VDC) (GΩ):	1 / - / -

Note:

1) All specifications at TA=25°C, humidity <75%, nominal input voltage and rated output load unless otherwise specified.

2) See below recommended circuits for more details

3) Operation under minimum load will not demage the converter, however, they may not meet allspecification listed and that will reduce the lifetime of the product

TYPICAL CHARACTERISTICS

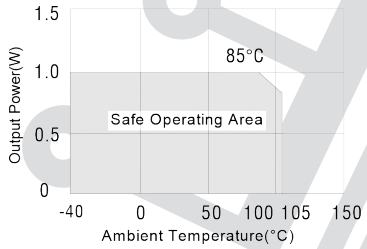

MECHANICAL DIMENSION

All dimensions in : mm±0.10mm
Others in ±0.25mm

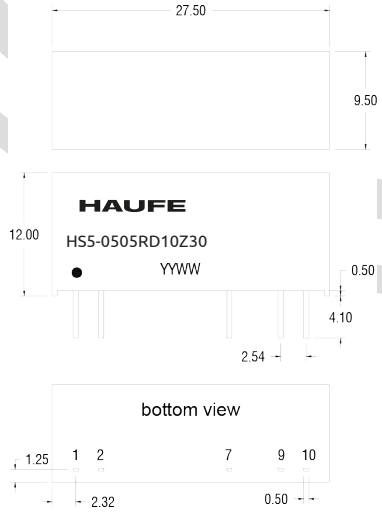

PIN CONNECTIONS

10 PIN SIP	
Pin	Function
1	+Vin
2	-Vin
7	+Vout
9	-Vout
10	0V

RECOMMENDED FOOTPRINT DETAILS

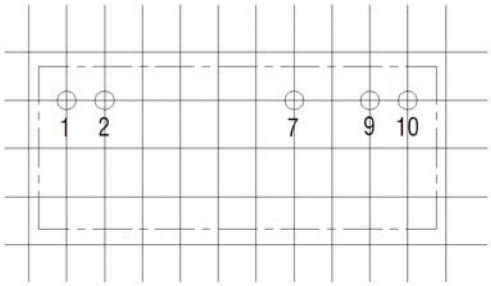

Unless otherwise stated all dimensions in mm ±0.5mm.

TUBE OUTLINE DIMENSIONS

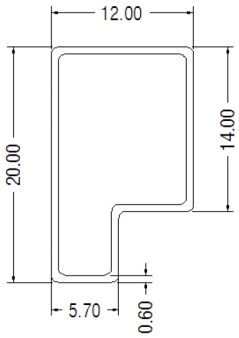

All dimensions in mm ±0.5mm.
Tube length : 520mm Tube Quantity:15PCS

V1.1/0318 • Stand 0318 • Irrtümer vorbehalten • Copyright © 2018 by HAUFE GmbH & Co. KG

INDUKTIVITÄTEN
STROMVERSORGUNGEN
BLECHBEARBEITUNG
MAGNETISCHE ABSCHIRMUNGEN

APPLICATION NOTES:

1. REQUIREMENT ON OUTPUT LOAD:

To ensure this module can operate efficiently and reliably, During operation, the minimum output load could not be less than 10% of the full load. If the actual output power is very small,please connect a resistor with proper resistance at the output end in parallel to increase the load.

2. RECOMMENDED CIRCUIT:

If you want to further decrease the input/output ripple, an "LC" filtering network may be connected to the input and output ends of the DC/DC converter, see (Figure 1).

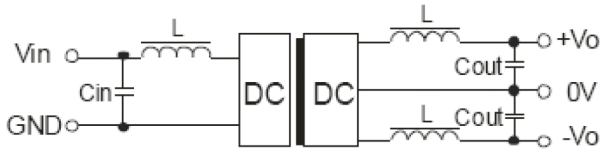

(Figure 1)

It should also be noted that the inductance and the frequency of the "LC" filtering network should be staggered with the DC/DC frequency to avoid mutual interference. However, the capacitance of the output filter capacitor must be proper. If the capacitance is too big, a startup problem might arise. For every channel of output, provided the safe and reliable operation is ensured, the greatest capacitance of its filter capacitor sees (Table 1)

EXTERNAL CAPACITOR TABLE (Table 1)

Vin (VDC)	Cin (μF)	Vout (VDC)	Cout (μF)
5	4.7	±5	4.7
12	2.2	±9	2.2
24	0.47	±12	1
-	-	±15	0.47

3. OVERLOAD PROTECTION:

Under normal operating conditions, the output circuit of these products has no protection against over-current and short-circuits. The simplest method is to connect a self-recovery fuse in series at the input end or add a circuit breaker to the circuit.

4. INPUT OVER-VOLTAGE PROTECTION CIRCUIT:

The simplest device for input over-voltage protection is a linear voltage regulator with overheat protection that is connected to the input end in series (Figure 2).

(Figure 2)

When the environment temperature is higher than 71°C, the product output power should be less then 60% of the rated power.
No parallel connection or plug and play.
Use dual output simultaneously , forbid opening output pin (0V) to use as single output.

V1.1/0318 • Stand 0318 • Irrtümer vorbehalten • Copyright © 2018 by HAUFE GmbH & Co. KG

BLECHBEARBEITUNG
MAGNETISCHE ABSCHIRMUNGEN
INDUKTIVITÄTEN
STROMVERSORGUNGEN

HS6-XXYYRS10Z15/Z30P series are a range of isolated 1 Watt converters in a SIP8 package, 2:1 wide input range and tightly regulated output voltage qualifies these converters for many cost critical applications in industrial and consumer electronics. Operating temperature ranges from -40 °C to +85°C the internal SMD construction makes it possible to offer a product with high performance at low cost.

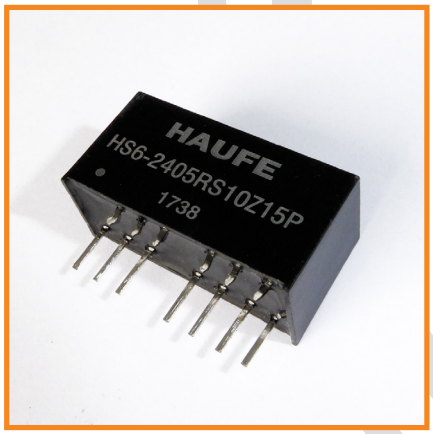

FEATURES:

- *RoHS compliant*
- *Operating temperature: -40°C to +85°C*
- *Efficiency up to 83%*
- *Output voltage: 3.3V, 5V, 9V, 12V, 15V, 24V*
- *2:1 wide range voltage input*
- *Low regulation*
- *Power density 0.91W/cm³*
- *Low ripple noise*
- *Continuous short circuit protection*
- *1.5KVDC isolation, 3 KVDC optional*
- *Input voltage: 5V, 12V, 24V, 48V*
- *External control (CTRL)*
- *Optional: Continuous short circuit protection*

H-Model	Input Voltage (VDC) Nominal	Input Voltage (VDC) Range	Input Voltage (VDC) Max*	Output Voltage (VDC)	Output Current (mA) Max.	Output Current(mA) Min.	Efficiency (%,Typ.)
HS6-1203RS10Z15/30P	12 (2:1)	9.0-18	22	3.3	303	30	74
HS6-2403RS10Z15/30P	24 (2:1)	18-36	40	3.3	303	30	72
HS6-0505RS10Z15/30P	5 (2:1)	4.5-9.0	11	5	200	20	70
HS6-1205RS10Z15/30P	12 (2:1)	9.0-18	22	5	200	20	76
HS6-2405RS10Z15/30P	24 (2:1)	18-36	40	5	200	20	76
HS6-4805RS10Z15/30P	48 (2:1)	36-72	80	5	200	20	76
HS6-0509RS10Z15/30P	5 (2:1)	4.5-9.0	11	9	111	11	71
HS6-1209RS10Z15/30P	12 (2:1)	9.0-18	22	9	111	11	78
HS6-2409RS10Z15/30P	24 (2:1)	18-36	40	9	111	11	78
HS6-4809RS10Z15/30P	48 (2:1)	36-72	80	9	111	11	78
HS6-0512RS10Z15/30P	5 (2:1)	4.5-9.0	11	12	83	8	76
HS6-1212RS10Z15/30P	12 (2:1)	9.0-18	22	12	83	8	79
HS6-2412RS10Z15/30P	24 (2:1)	18-36	40	12	83	8	80
HS6-4812RS10Z15/30P	48 (2:1)	36-72	80	12	83	8	80
HS6-0515RS10Z15/30P	5 (2:1)	4.5-9.0	11	15	67	7	75
HS6-1215RS10Z15/30P	12 (2:1)	9.0-18	22	15	67	7	80
HS6-2415RS10Z15/30P	24 (2:1)	18-36	40	15	67	7	80
HS6-4815RS10Z15/30P	48 (2:1)	36-72	80	15	67	7	80
HS6-0524RS10Z15/30P	5 (2:1)	4.5-9.0	11	24	42	4	72
HS6-1224RS10Z15/30P	12 (2:1)	9.0-18	22	24	42	4	72
HS6-2424RS10Z15/30P	24 (2:1)	18-36	40	24	42	4	77

Package Unit: 15

The models listed above is just for standard type. If you need the special specification product, please contact our specialists: **sales@haufe-power.de**

HS6-0505RS10Z "***15/30"*** P = 1.5KVDC or 3.0KVDC

The information and specifications contained in this data sheet are believed to be correct at time of publication. However, HAUFE GmbH & Co. KG accepts no responsibility for consequences arising from printing errors or inaccuracies. Specifications are subject to change without notice. No rights under any patent accompany the sale of any such product(s) or information contained herein.

V1.1/0318 • Stand 0318 • Irrtümer vorbehalten • Copyright © 2018 by HAUFE GmbH & Co. KG

BLECHBEARBEITUNG MAGNETISCHE ABSCHIRMUNGEN INDUKTIVITÄTEN STROMVERSORGUNGEN

ISOLATION CHARACTERISTICS:

Isolation test voltage (VDC):	1500 / 3000 (tested for 1 minute and 1mA max.)
Isolation resistance (Test at 500 VDC) (GΩ):	1 / - / -
Isolation capacitance (Input/Output, 100kHz/1V (pF):	- / 35 / -

ABSOLUTE MAXIMUM RATINGS:

Short-circuit protection:	continuous, automatic recovery

OUTPUT CHRACTERISTICS (Min. / Typ. / Max.):

Output power (W): (Refer to product program)	0.1 / - / 1
Output voltage accuracy (Refer to recommended circuit) (%):	- / ±1 / ±3
Temperature drift (Vout) (%/°C):	- / - / ±0.03
Ripple & Noise (mVp-p):	- / 25 / 75 (20MHz Bandwidth)
Line regulation (input voltge from low to high) (%):	- / ±0.2 / ±0.5
Load regulation 10% to 100% load (%):	- / ±0.5 / ±1.0

All specifications typical at TA=25°C, nominal input voltage and rated output current unless otherwise specified.

GENERAL CHARACTERISTICS (Min. / Typ. / Max.)

MTBF (K hours):	1000 / - / -
Weight (g):	5
Case material:	Plastic (UL94-V0)

TEMPERATUR CHARACTERISTICS (Min. / Typ. / Max.)

Storage humidity, test condition (%):	- / - / 95
Operating temperature (°C):	-40 / - / +85
Storage temperature (°C):	-50 / - / +125
Lead temperature (°C):	- / - / 300 (1.5mm from case for 10 seconds)
No-load power consumption (mW):	120 / - / -
Cooling:	Free air convection

TEMPERATURE DERATING GRAPHS

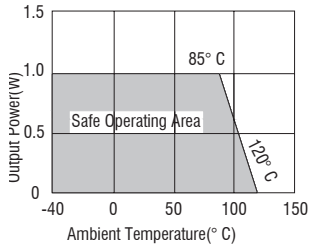

MECHANICAL DIMENSION

SIP Package

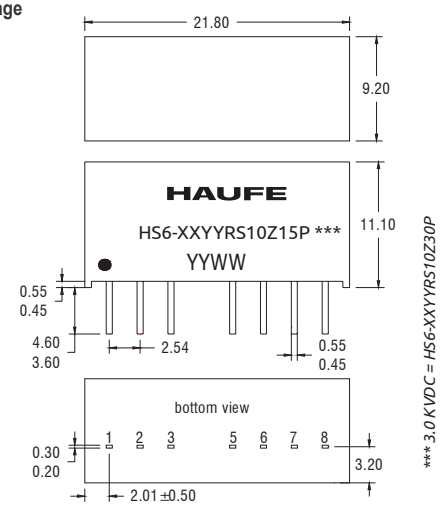

Weight: 5.0g

All dimensions in mm±0.25mm. All pins on a 2.54mm pitch and within±0.25mm of true position.

PIN CONNECTIONS (8 PIN SIP)

Pin	Single Output
1	GND
2	Vin
3	CTRL
5 *	NC
6	+V0
7	0V
8	CS

SOLDERING INFORMATION

This series is compatible with RoHS soldering systems with a peak wave solder temperature of 300° C for 10 seconds. These series are backward compatible with Sn/Pb soldering systems.

* THIS PIN MUST HAVE NO EXTERNAL CONNECTION

TUBE OUTLINE DIMENSIONS

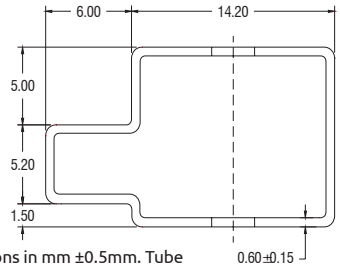

All dimensions in mm ±0.5mm. Tube length 520mm ±2mm.

APPLICATION NOTES

External capacitance:
These converters will work without external capacitors, in order to guarantee the full parametric performance over the full line and load range we recommended you to use the value we listed at right side. All parts have been tested and characterized using the following values and test circuit.

RECOMMENDED FOOTPRINT DETAILS

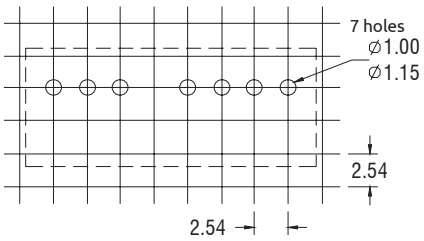

Unless otherwise stated, all dimensions in mm ±0.5mm

External Capacitor Table

Single Vout (VDC)	Cout (uF)
3.3	1000
5	680
9	560
12	470
15	330
24	220

RECOMMENDED CIRCUIT

Single Output

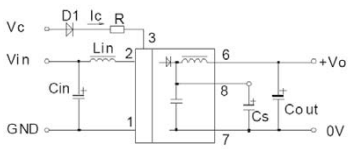

V1.1/0318 • Stand 0318 • Irrtümer vorbehalten • Copyright © 2018 by HAUFE GmbH & Co. KG

INDUKTIVITÄTEN
STROMVERSORGUNGEN
BLECHBEARBEITUNG
MAGNETISCHE ABSCHIRMUNGEN

HS6-XXYYRD10Z15/Z30P series are a range of isolated 1 Watt converters in a SIP package, 2:1 wide input range and tightly regulated output voltage qualifies these converters for many cost critical applications in industrial and consumer electronics. Operating temperature ranges from -40 °C to +85 °C the Internal SMD construction makes it possible to offer a product with high performance at low cost.

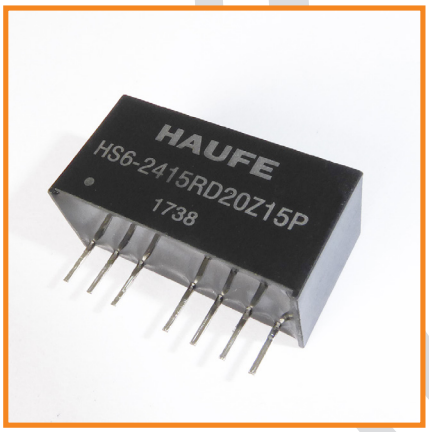

FEATURES:

- *RoHS compliant*
- *Operating temperature: -40°C to +85°C*
- *Efficiency up to 83%*
- *Output voltage: ±5V, ±9V, ±12V, ±15V,±24V*
- *2:1 wide range voltage input*
- *Low regulation*
- *Power density 0.91W/cm³*
- *Low ripple noise*
- *Continuous short circuit protection*
- *Isolation: 1.5KVDC, 3KVDC optional*
- *Input voltage: 5V, 12V, 24V, 48V*
- *External control (CTRL)*
- *Optional: Continuous short circuit protection*

H-Model	Input Voltage (VDC) Nominal	Input Voltage (VDC) Range	Input Voltage (VDC) Max*	Output Voltage (VDC)	Output Current(mA) Max.	Output Current (mA) Min.	Efficiency (%,Typ.)
HS6-0505RD10Z15/30P	5 (2:1)	4.5-9.0	11	±5	±100	±10	72
HS6-0509RD10Z15/30P	5 (2:1)	4.5-9.0	11	±9	±55	±5	72
HS6-0512RD10Z15/30P	5 (2:1)	4.5-9.0	11	±12	±42	±4	74
HS6-0515RD10Z15/30P	5 (2:1)	4.5-9.0	11	±15	±33	±3	73
HS6-1205RD10Z15/30P	12 (2:1)	9.0-18	22	±5	±100	±10	76
HS6-1209RD10Z15/30P	12 (2:1)	9.0-18	22	±9	±55	±5	76
HS6-1212RD10Z15/30P	12 (2:1)	9.0-18	22	±12	±42	±4	74
HS6-1215RD10Z15/30P	12 (2:1)	9.0-18	22	±15	±33	±3	75
HS6-1224RD10Z15/30P	12 (2:1)	9.0-18	22	±24	±21	±2	73
HS6-2405RD10Z15/30P	24 (2:1)	18-36	40	±5	±100	±10	78
HS6-2409RD10Z15/30P	24 (2:1)	18-36	40	±9	±55	±5	76
HS6-2412RD10Z15/30P	24 (2:1)	18-36	40	±12	±42	±4	78
HS6-2415RD10Z15/30P	24 (2:1)	18-36	40	±15	±33	±3	76
HS6-4805RD10Z15/30P	48 (2:1)	36-72	80	±5	±100	±10	76
HS6-4812RD10Z15/30P	48 (2:1)	36-72	80	±12	±42	±4	77
HS6-4815RD10Z15/30P	48 (2:1)	36-72	80	±15	±33	±3	75

Package Unit: 15

The models listed above is just for standard type. If you need the special specification product, please contact our specialists: **sales@haufe-power.de**

HS6-0505RD10Z ***"15/30"*** P = 1.5KVDC or 3.0KVDC

V1.1/0318 • Stand 0318 • Irrtümer vorbehalten • Copyright © 2018 by HAUFE GmbH & Co. KG

BLECHBEARBEITUNG
MAGNETISCHE ABSCHIRMUNGEN
INDUKTIVITÄTEN
STROMVERSORGUNGEN

The information and specifications contained in this data sheet are believed to be correct at time of publication. However, HAUFE GmbH & Co. KG accepts no responsibility for consequences arising from printing errors or inaccuracies. Specifications are subject to change without notice. No rights under any patent accompany the sale of any such product(s) or information contained herein.

HAUFE GmbH & Co. KG • Weilburger Str. 14 • 61250 Usingen • Tel.: +49 6081 9153-0 • info@haufe-uebertrager.de

ISOLATION CHARACTERISTICS:

Isolation test voltage (VDC):	1500 / 3000 (tested for 1 minute and 1mA max.)
Resistance (Test at 500 VDC) (GΩ):	1 / - / -
Isolation capacitance (Input/Output, 100kHz/1V (pF):	- / 35 / -

ABSOLUTE MAXIMUM RATINGS:

Short-circuit protection:	continuous automatic recovery

OUTPUT CHRACTERISTICS (Min. / Typ. / Max.):

Output power (W):	Refer to product program 0.1 / - / 1
Output voltage accuracy (Refer to recommended circuit) (%):	- / ±1 / ±3
Temperature drift (Vout) (%/_):	- / - / ±0.03
Ripple & Noise (mVp-p):	- / 25 / 75 (20MHz Bandwidth)
Line regulation (input voltge from low to high) (%):	- / ±0.2 / ±0.5
Load regulation 10% to 100% load (%):	- / ±0.5 / ±0.75

Output Characteristics Notes:

All specifications typical at TA=25°C, nominal input voltage and rated output current unless otherwise specified.

GENERAL CHARACTERISTICS (Min. / Typ. / Max.)

MTBF (K hours):	1000 / - / -
Weight (g):	5
Case material:	Plastic (UL94-V0)

TEMPERATUR CHARACTERISTICS (Min. / Typ. / Max.)

Storage humidity, test condition (%):	- / - / 96
Operating temperature (°C):	-40 / - / 86
Storage temperature (°C):	-50 / - / 126
Lead temperature (°C):	- / - / 300 (1.5mm from case for 10 seconds)
No-load power consumption (mW):	121 / - / -
Cooling:	Free air convection

TEMPERATURE DERATING GRAPHS

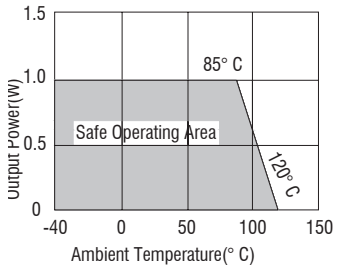

MECHANICAL DIMENSION

SIP Package

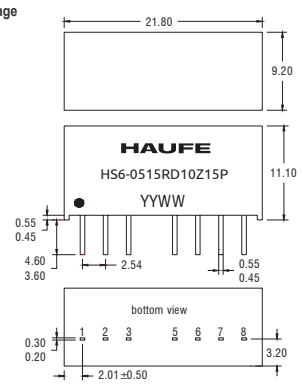

Weight: 5.0g
All dimensions in mm±0.25mm. All pins on a 2.54mm pitch and within±0.25mm of true position.

PIN CONNECTIONS (8 PIN SIP)

Pin	Dual Output
1	GND
2	Vin
3	CTRL
5 *	NC
6	+V0
7	0V
8	-V0

SOLDERING INFORMATION

This series is compatible with RoHS soldering systems with a peak wave solder temperature of 300° C for 10 seconds. These series are backward compatible with Sn/Pb soldering systems.

TUBE OUTLINE DIMENSIONS

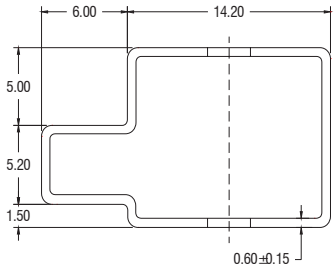

All dimensions in mm ±0.5mm. Tube length 520mm ±2mm.

TUBE OUTLINE DIMENSIONS

External capacitance: These converters will work without external capacitors, in order to guarantee the full parametric performance over the full line and load range we recommended you to use the value we listed at right side. All parts have been tested and characterized using the following values and test circuit.

RECOMMENDED FOOTPRINT DETAILS

7 holes

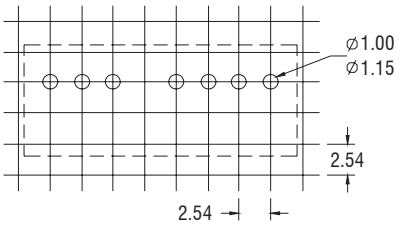

Unless otherwise stated, all dimensions in mm ±0.5mm

RECOMMENDED CIRCUIT

Dual Output

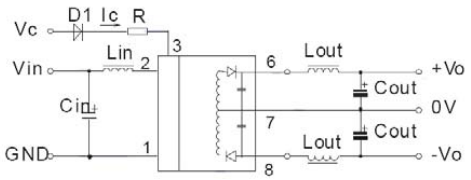

External Capacitor Table

Dual Vout (VDC)	Cout (uF)
±5	330
±9	330
±12	220
±15	150
±24	100
-	-

V1.1/0318 • Stand 0318 • Irrtümer vorbehalten • Copyright © 2018 by HAUFE GmbH & Co. KG

BLECHBEARBEITUNG
MAGNETISCHE ABSCHIRMUNGEN
INDUKTIVITÄTEN
STROMVERSORGUNGEN

HS6-XXYYRS20Z15/Z30P series are a range of isolated 2 Watt converters in a SIP package, 2:1 wide input range and tightly regulated output voltage qualifies these converters for many cost critical applications in industrial and consumer electronics. Operating temperature range from -40 °C to +85 °C .

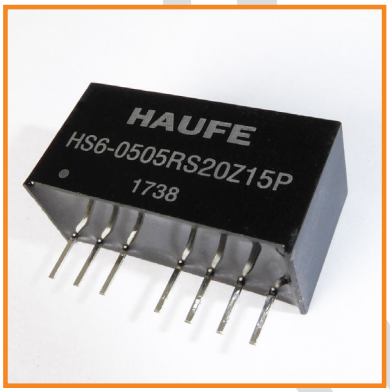

FEATURES:

- *RoHS compliant,*
- *Operating temperature: -40°C to 85°C*
- *Efficiency up to 80%*
- *Output voltage: 3.3V, 5V, 9V, 12V, 15V, 24V*
- *2:1 wide range voltage input*
- *Low regulation*
- *Power density 0.91W/cm³*
- *Low noise*
- *Continuous short circuit protection*
- *Isolation: 1.5KVDC , 3KVDC optional*
- *Input voltage: 5V,12V, 24V, 48V*
- *External control (CTRL)*
- *Optional: 3kV isolation*

H-Model	Input Voltage (VDC) Rated	Input Voltage (VDC) Range values	Input Voltage (VDC) Max*	Output Voltage (VDC)	Output Current(mA) Max.	Output Current(mA) Min.	Efficiency (%,Typ.)
HS6-0503RS20Z15/30P	5 (2:1)	4.5-9	11	3.3	500	50	64
HS6-0509RS20Z15/30P	5 (2:1)	4.5-9	11	9	222	22	72
HS6-0512RS20Z15/30P	5 (2:1)	4.5-9	11	12	167	16	73
HS6-0515RS20Z15/30P	5 (2:1)	4.5-9	11	15	133	13	72
HS6-0524RS20Z15/30P	5 (2:1)	4.5-9	11	24	80	8	71
HS6-1203RS20Z15/30P	12 (2:1)	9-18	22	3.3	500	50	68
HS6-1205RS20Z15/30P	12 (2:1)	9-18	22	5	400	40	75
HS6-1209RS20Z15/30P	12 (2:1)	9-18	22	9	222	22	77
HS6-1212RS20Z15/30P	12 (2:1)	9-18	22	12	167	16	79
HS6-1215RS20Z15/30P	12 (2:1)	9-18	22	15	133	13	80
HS6-1224RS20Z15/30P	12 (2:1)	9-18	22	24	80	8	78
HS6-2403RS20Z15/30P	24 (2:1)	18-36	40	3.3	500	50	67
HS6-2405RS20Z15/30P	24 (2:1)	18-36	40	5	400	40	77
HS6-2409RS20Z15/30P	24 (2:1)	18-36	40	9	222	22	79
HS6-2412RS20Z15/30P	24 (2:1)	18-36	40	12	167	16	80
HS6-2415RS20Z15/30P	24 (2:1)	18-36	40	15	133	13	80
HS6-2424RS20Z15/30P	24 (2:1)	18-36	40	24	80	8	80
HS6-4803RS20Z15/30P	48 (2:1)	36-72	80	3.3	500	50	71
HS6-4805RS20Z15/30P	48 (2:1)	36-72	80	5	400	40	75
HS6-4809RS20Z15/30P	48 (2:1)	36-72	80	9	222	22	76
HS6-4812RS20Z15/30P	48 (2:1)	36-72	80	12	167	16	78
HS6-4815RS20Z15/30P	48 (2:1)	36-72	80	15	133	13	78
HS6-4824RS20Z15/30P	48 (2:1)	36-72	80	24	80	8	80

The models listed above is just for standard type. If you need the special specification product, please contact our specialists: **sales@haufe-power.de** **Package Unit: 23**

HS6-0505RS20Z "***15/30"*** P = 1.5KVDC or 3.0KVDC

The information and specifications contained in this data sheet are believed to be correct at time of publication. However, HAUFE GmbH & Co. KG accepts no responsibility for consequences arising from printing errors or inaccuracies. Specifications are subject to change without notice. No rights under any patent accompany the sale of any such product(s) or information contained herein.

V1.1/0318 • Stand 0318 • Irrtümer vorbehalten • Copyright © 2018 by HAUFE GmbH & Co. KG

BLECHBEARBEITUNG MAGNETISCHE ABSCHIRMUNGEN INDUKTIVITÄTEN STROMVERSORGUNGEN

ISOLATION CHARACTERISTICS:

Isolation test voltage (VDC):	1500 / 3000 (tested for 1 minute and leakage current less than 1)
Resistance (Test at 500 VDC) (GΩ):	1 / - / -
Isolation capacitance (Input/Output, 100kHz/1V (pF):	- / 80 / -

ABSOLUTE MAXIMUM RATINGS:

Short-circuit protection:	continuous automatic recovery

OUTPUT CHRACTERISTICS (Min. / Typ. / Max.):

Positive voltage accuracy (%):	- / ±1 / ±3
Negative voltage accuracy (%):	- / ±1 / ±3
Output power (W):	Refer to product program 0.3 / - / 3
Temperature drift (Vout) (%/_):	- / - / ±0.03
Ripple & Noise (mVp-p):	- / 50 / 100 (20MHz Bandwidth)
Line regulation (input voltge from low to high) (%):	- / ±0.2 / ±0.5
Load regulation 10% to 100% load (%):	- / ±0.5 / ±1.0
Output Characteristics Notes:	All specifications typical at

TA=25°C, nominal input voltage and rated output current unless otherwise specified.

GENERAL CHARACTERISTICS (Min. / Typ. / Max.)

Switching frequency 100% load, nominal input (kHz):	- / 300 / -
MTBF (K hours):	1001 / - / -
Weight (g):	6
Case material:	Plastic (UL94-V0)

TEMPERATUR CHARACTERISTICS (Min. / Typ. / Max.)

Storage humidity, test condition (%):	- / - / 95
Operating temperature (°C):	-40 / - / 85
Storage temperature (°C):	-55 / - / 125
Temp. Rise at full load (°C):	- / 15 / -
Lead temperature (°C):	- / - / 300 (1.5mm from case for 10 seconds)
No-load power consumption (mW):	- / 300 / -
Cooling:	Free air convection

RECOMMENDED CIRCUIT

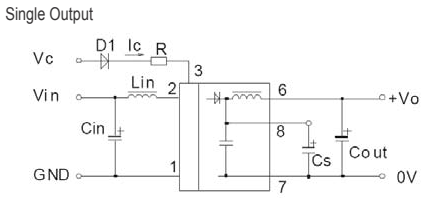

EXTERNAL CAPACITOR TABLE

Single Vout (VDC)	Cout (uF)
3.3	2200
5	1000
9	680
12	470
15	330
24	220

APPLICATION NOTE

External capacitance: These converters will work without external capacitors, in order to guarantee the full parametric performance over the full line and load range we recommended you to use the value we listed at right side. All parts have been tested and characterized using the following values and test circuit.

TEMPERATURE DERATING GRAPHS

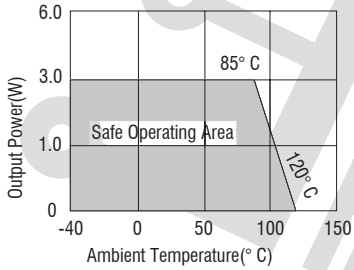

MECHANICAL DIMENSION

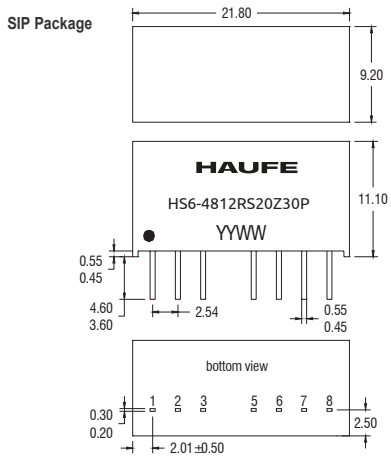

All dimensions in mm ±0.25mm. All pins on a 2.54mm pitch within ±2mm of true position. Weight: 5.0g

PIN CONNECTIONS (8 PIN SIP)

Pin	Single
1	GND
2	Vin
3	CTRL
5 *	NC
6	+V0
7	0V
8	CS

SOLDERING INFORMATION

This series is compatible with RoHS soldering systems with a peak wave solder temperature of 300° C for 10 seconds. These series are backward compatible with Sn/Pb soldering systems.

RECOMMENDED FOOTPRINT DETAILS

Unless otherwise stated, all dimensions in ±0.5mm.

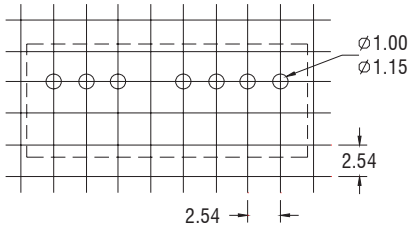

TUBE OUTLINE DIMENSIONS

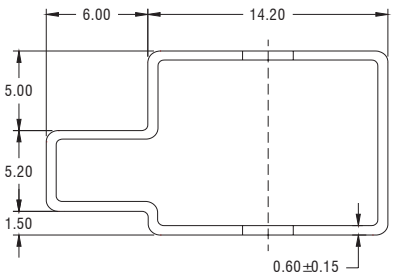

All dimensions in mm ±0.5mm. Tube length 520mm ±2mm.

INDUKTIVITÄTEN
STROMVERSORGUNGEN
BLECHBEARBEITUNG
MAGNETISCHE ABSCHIRMUNGEN

V1.1/0318 • Stand 0318 • Irrtümer vorbehalten • Copyright © 2018 by HAUFE GmbH & Co. KG

HS6-XXYYRD20Z15/Z30P series are a range of isolated 2 Watt converters in a SIP package, 2:1 wide input range and tightly regulated output voltage qualifies these converters for many cost critical applications in industrial and consumer electronics. Operating temperature range from -40 °C to +85 °C .

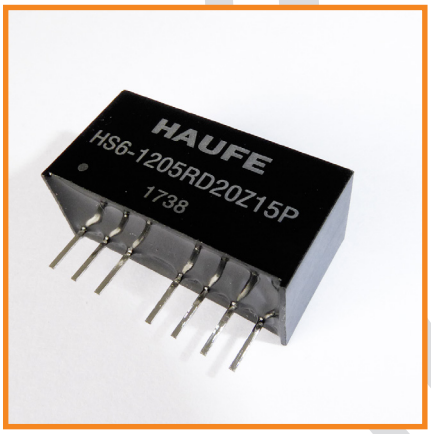

FEATURES:

- *RoHS compliant*
- *Operating temperature: -40°C to 85°C*
- *Efficiency up to 80%*
- *Output voltage: ±5V, ±9V, ±12V, ±15V, ±24V*
- *2:1 wide range voltage input*
- *Low regulation*
- *Power density 0.91W/cm³*
- *Low noise*
- *Continuous short circuit protection*
- *Isolation: 1.5KVDC , 3 KVDC optional*
- *Input voltage: 5V,12V, 24V, 48V*
- *External control (CTRL)*
- *Optional: 3kV isolation*

H-Model	Input Voltage (VDC) Rated	Input Voltage (VDC) Range values	Input Voltage (VDC) Max*	Output Voltage (VDC)	Output Current(mA) Max.	Output Current (mA) Min.	Efficiency (%,Typ.)
HS6-0505RD20Z15/30P	5 (2:1)	4.5-9	11	±5	±200	±20	67
HS6-0509RD20Z15/30P	5 (2:1)	4.5-9	11	±9	±111	±11	71
HS6-0512RD20Z15/30P	5 (2:1)	4.5-9	11	±12	±83	±8	72
HS6-0515RD20Z15/30P	5 (2:1)	4.5-9	11	±15	±67	±7	73
HS6-0524RD20Z15/30P	5 (2:1)	4.5-9	11	±24	±42	±4	72
HS6-1205RD20Z15/30P	12 (2:1)	9-18	22	±5	±200	±20	73
HS6-1209RD20Z15/30P	12 (2:1)	9-18	22	±9	±111	±11	74
HS6-1212RD20Z15/30P	12 (2:1)	9-18	22	±12	±83	±8	78
HS6-1215RD20Z15/30P	12 (2:1)	9-18	22	±15	±67	±7	77
HS6-2405RD20Z15/30P	24 (2:1)	18-36	40	±5	±200	±20	76
HS6-2409RD20Z15/30P	24 (2:1)	18-36	40	±9	±111	±11	78
HS6-2412RD20Z15/30P	24 (2:1)	18-36	40	±12	±83	±8	79
HS6-2415RD20Z15/30P	24 (2:1)	18-36	40	±15	±67	±7	78
HS6-4805RD20Z15/30P	48 (2:1)	36-72	80	±5	±200	±20	75
HS6-4809RD20Z15/30P	48 (2:1)	36-72	80	±9	±111	±11	78
HS6-4812RD20Z15/30P	48 (2:1)	36-72	80	±12	±83	±8	79
HS6-4815RD20Z15/30P	48 (2:1)	36-72	80	±15	±67	±7	79

Package Unit: 23

The models listed above is just for standard type. If you need the special specification product, please contact our specialists: **sales@haufe-power.de**

HS6-0505RD20Z "***15/30"*** P = 1.5KVDC or 3.0KVDC

The information and specifications contained in this data sheet are believed to be correct at time of publication. However, HAUFE GmbH & Co. KG accepts no responsibility for consequences arising from printing errors or inaccuracies. Specifications are subject to change without notice. No rights under any patent accompany the sale of any such product(s) or information contained herein.

V1.1/0318 • Stand 0318 • Irrtümer vorbehalten • Copyright © 2018 by HAUFE GmbH & Co. KG

BLECHBEARBEITUNG MAGNETISCHE ABSCHIRMUNGEN INDUKTIVITÄTEN STROMVERSORGUNGEN

ISOLATION CHARACTERISTICS:

Isolation test voltage (VDC):	1500 / 3000 (tested for 1 minute and leakage current less than 1)
Resistance (Test at 500 VDC) (GΩ):	1 / - / -
Isolation capacitance (Input/Output, 100kHz/1V (pF):	- / 80 / -
Resistance (Viso = 1000 VDC) (GΩ):	

ABSOLUTE MAXIMUM RATINGS:

Short-circuit protection:	continuous automatic recovery

OUTPUT CHRACTERISTICS (Min. / Typ. / Max.):

Positive voltage accuracy (%):	- / ±1 / ±3
Negative voltage accuracy (%):	- / ±1 / ±3
Output power (W):	Refer to product program 0.3 / - / 3
Temperature drift (Vout) (%/_):	- / - / ±0.03
Ripple & Noise (mVp-p):	- / 50 / 100 (20MHz Bandwidth)
Line regulation (input voltge from low to high) (%):	- / ±0.2 / ±0.5
Load regulation 10% to 100% load (%):	- / ±0.5 / ±0.75

Output Characteristics Notes: All specifications typical at TA=25°C, nominal input voltage and rated output current unless otherwise specified.

GENERAL CHARACTERISTICS (Min. / Typ. / Max.)

Switching frequency 100% load, nominal input (kHz):	- / 300 / -
MTBF (K hours):	1002 / - / -
Weight (g):	6
Case material:	Plastic (UL94-V0)

TEMPERATUR CHARACTERISTICS (Min. / Typ. / Max.)

Storage humidity, test condition (%):	- / - / 95
Operating temperature (°C):	-40 / - / 85
Storage temperature (°C):	-55 / - / 125
Temp. Rise at full load (°C):	- / 15 / -
Lead temperature (°C):	- / - / 300 (1.5mm from case for 10 seconds)
No-load power consumption (mW):	- / 300 / -
Cooling:	Free air convection

RECOMMENDED CIRCUIT

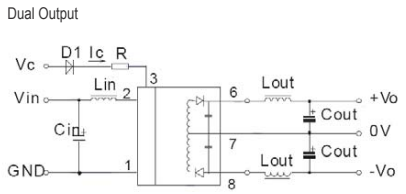

EXTERNAL CAPACITOR TABLE

Single Vout (VDC)	Cout (uF)	Dual Vout (VDC)	Cout (uF)
3.3	2200	±5	680
5	1000	±9	470
9	680	±12	330
12	470	±15	220
15	330	-	-
24	220	-	-

APPLICATION NOTE

External capacitance: These converters will work without external capacitors, in order to guarantee the full parametric performance over the full line and load range we recommended you to use the value we listed at right side. All parts have been tested and characterized using the following values and test circuit.

TEMPERATURE DERATING GRAPHS

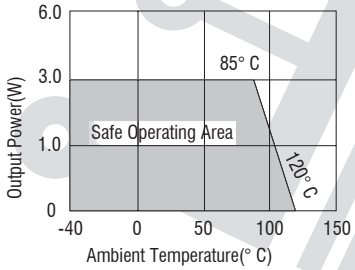

MECHANICAL DIMENSION

SIP Package

All dimensions in mm ±0.25mm. All pins on a 2.54mm pitch within ±2mm of true position. Weight: 5.0g

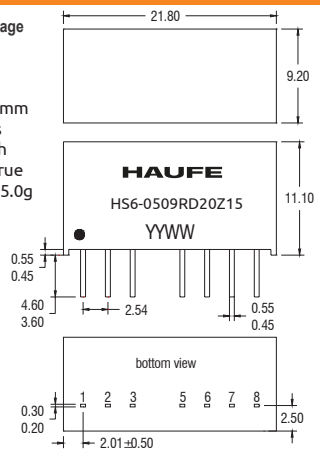

PIN CONNECTIONS (8 PIN SIP) SOLDERING INFORMATION

Pin	Dual
1	GND
2	Vin
3	CTRL
5 *	NC
6	+V0
7	0V
8	-V0

This series is compatible with RoHS soldering systems with a peak wave solder temperature of 300° C for 10 seconds. These series are backward compatible with Sn/Pb soldering systems.

RECOMMENDED FOOTPRINT DETAILS

Unless otherwise stated, all dimensions in ±0.5mm.

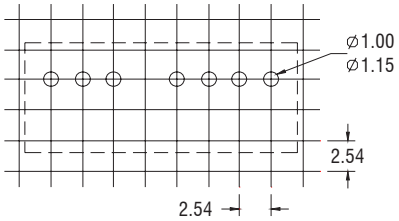

TUBE OUTLINE DIMENSIONS

All dimensions in mm ±0.5mm. Tube length 520mm ±2mm.

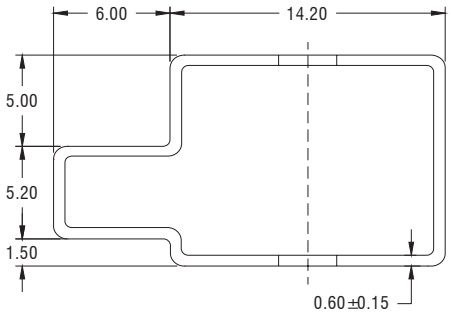

V1.1/0318 • Stand 0318 • Irrtümer vorbehalten • Copyright © 2018 by HAUFE GmbH & Co. KG

BLECHBEARBEITUNG MAGNETISCHE ABSCHIRMUNGEN INDUKTIVITÄTEN STROMVERSORGUNGEN

The HP78XX-0.5 series has high efficiency, short circuit protection, thermal shutdown, no heat sink required, Industry standard pinout . Ideal for redialing 78xx linear regulates and are pin compatible.

FEATURES:

- *RoHS compliant*
- *Short circuit protection, thermal shutdown*
- *SIP package*
- *Wide input non-isolated, regulated single output*
- *Temperature range: -40°C ~ +85°C*
- *No heat sink required*
- *Efficiency up to 96%*
- *Low ripple and noise*
- *Industry standard pinout*

H-Model	Input Voltage (VDC)		Output		Efficiency (%)	
	Nominal	Range	Voltage (VDC)	Current(mA)	Vin (Min)	Vin (Max)
HP78-1.5-05	12	4.75~26	1.5	500	76	66
HP78-1.8-05	12	4.75~28	1.8	500	79	67
HP78-2.5-05	12	4.75~28	2.5	500	85	73
HP78-3.3-05	24	4.75~28	3.3	500	90	80
HP78-5.0-05	24	6.5~32	5.0	500	93	84
HP78-6.5-05	24	8~32	6.5	500	94	87
HP78-9.0-05	24	11~32	9.0	500	95	91
HP78-12-05	24	15~32	12	500	95	92
HP78-15-05	24	18~32	15	500	96	93

OUTPUT CHARACTERISTICS

Parameter	Conditions		Min	Typ.	Max.	Units
Output voltage accuracy	100% full load			±2	±3	%
Line regulation	Vin= min. to max. (at full load)	Vout:1.5V-2.5V		±0.5	±1.0	%
		Vout:3.3V-15V		±0.2	±0.4	%
Load regulation	10% to 100% load	Vout:1.5V-2.5V		±0.4	±0.75	%
		Vout:3.3V-15V		±0.4	±0.6	%
Ripple & Noise	20MHz Bandwidth(refer to figure 3)			25	35	mvp-p
Short circuit input power				0.5	1.8	W
Short circuit protection			Continuous, automatic recovery			
Thermal shutdown	Internal IC junction			150		℃
Output current limit	Vin= min. to max. at full load)	Vout:1.5V-3.3V			3000	mA
		Vout:5V-15V			2000	mA
Switching frequency	At full load, input voltage range		280	330	450	KHz
Quiescent current				5	8	mA
Temperature coefficient	–40℃~+85℃				±0.02	%/℃
Max capacitance load					1000	μF

All specifications typical at TA=25°C, nominal input voltage and rated output current unless otherwise specified.

INDUKTIVITÄTEN
STROMVERSORGUNGEN
BLECHBEARBEITUNG
MAGNETISCHE ABSCHIRMUNGEN

V1.1/0318 • Stand 0318 • Irrtümer vorbehalten • Copyright © 2018 by HAUFE GmbH & Co. KG

COMMON SPECIFICATIONS

Parameter	Conditions	Min.	Typ.	Max.	Units
Storage humidity range				95	℃
Operating temp. range	Power derating (above 71 °C)	-40		85	
Storage temp. range		-55		125	
Storage temp. Range Temp rise at full load				100	
Lead temperature	1.5mm from case for 10 seconds			300	
Cooling		Free air convection			
Case material		Plastic (UL94-V0)			
MTBF	25℃（MIL-HDBK-217F）	2000			k hours
Weight			2.0		g

TEMPERATURE DERATING GRAPHS

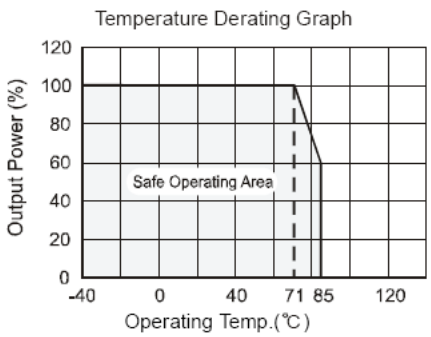

EXTERNAL CAPACITOR TABLE

Part Number	C1(Ceramic Capacitor)	C2(Ceramic Capacitor)
HP78-1.5-05	10μF/50V	22μF/6.3V
HP78-1.8-05	10μF/50V	22μF/6.3V
HP78-2.5-05	10μF/50V	22μF/6.3V
HP78-3.3-05	10μF/50V	22μF/6.3V
HP78-5.0-05	10μF/50V	22μF/10V
HP78-6.5-05	10μF/50V	10μF/10V
HP78-9.0-05	10μF/50V	10μF/16V
HP78-12-05	10μF/50V	10μF/25V
HP78-15-05	10μF/50V	10μF/25V

STANDARD APPLICATION CIRCUIT

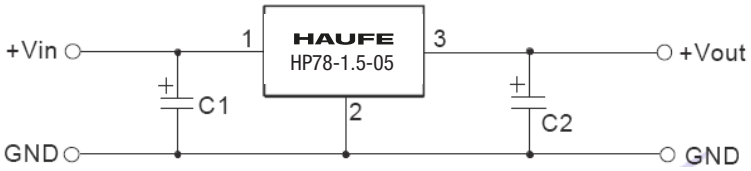

Note:

1. C1 and C2 are required and should be fitted close to the converter pins.
2. The capacitance of C1,C2 sees external capacitor table, it can be increased properly if required, and tantalum or low ESR electrolytic capacitors may also suffice.
3. No parallel connection or plug and play.

TEST CONFIGURATIONS (TA=25°C)

1.Efficiency and Output Voltage Ripple Test

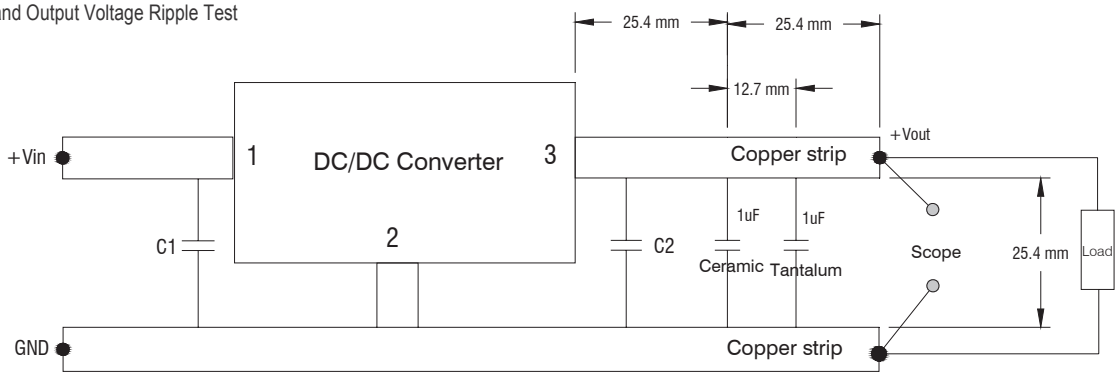

V1.1/0318 • Stand 0318 • Irrtümer vorbehalten • Copyright © 2018 by HAUFE GmbH & Co. KG

INDUKTIVITÄTEN STROMVERSORGUNGEN BLECHBEARBEITUNG MAGNETISCHE ABSCHIRMUNGEN

TEST CONFIGURATIONS (TA=25°C)

2.Start-up and Load Transient Response Test

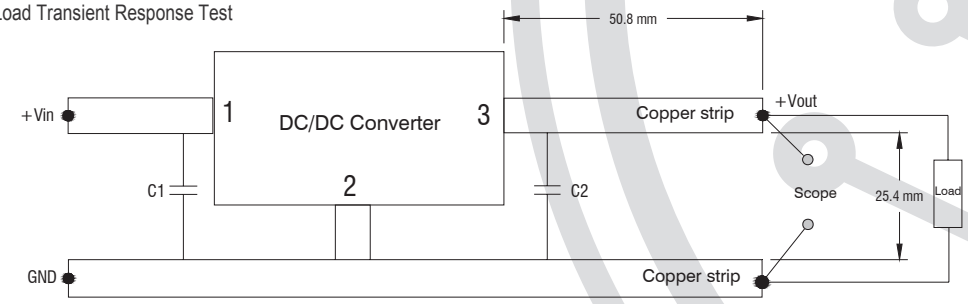

OUTPUT RIPPLE REDUCTION

To reduce output ripple, it is recommended to add a LC filter in output port. L: Recommended parameter 10μH ~ 47μH.

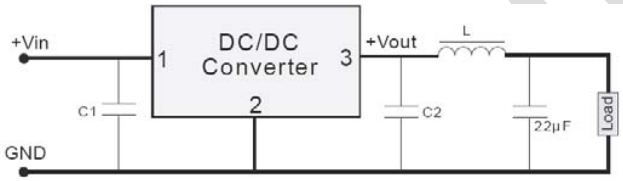

MECHANICAL DIMENSIONS

SIP Package

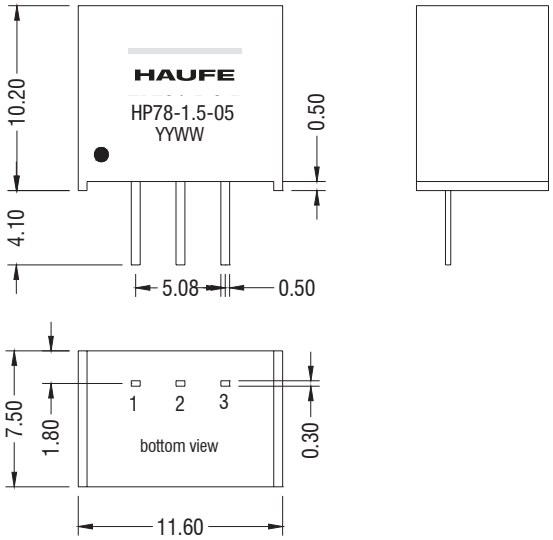

Pin	Function
1	+Vin
2	GND
3	+Vout

All dimensions in mm ±0.25.All pins on a 2.54mm pitch.

RECOMMENDED FOOTPRINT DETAILS

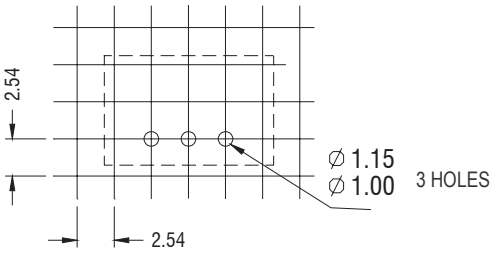

Unless otherwise stated all dimensions in mm ±0.5mm.

TUBE OUTLINE DIMENSIONS

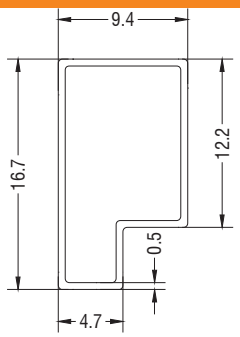

Unless otherwise stated all dimensions in mm ±0.5mm.

L=520mm ±2mm Packaging quantity:43PCS

L=220mm ±2mm Packaging quantity:17PCS

V1.1/0318 • Stand 0318 • Irrtümer vorbehalten • Copyright © 2018 by HAUFE GmbH & Co. KG

INDUKTIVITÄTEN
STROMVERSORGUNGEN
BLECHBEARBEITUNG
MAGNETISCHE ABSCHIRMUNGEN

HAUFE®
„PRECISION FOR YOUR SUCCESS"
... since 1947

The HP78-1 series has high efficiency, short circuit protection, thermal shut-down, no heat sink required, Industry standard pinout . Ideal for redialing 78xx linear regulates and are pin compatible.

FEATURES:

- *RoHS compliant*
- *Short circuit protection, thermal shutdown*
- *SIP package*
- *Wide input non-isolated, regulated single output*
- *Temperature range: -40°C ~ +85°C*
- *No heat sink required*
- *Efficiency up to 93%*
- *Low ripple noise*
- *Industry standard pinout*

H-Model	Input Voltage (VDC)		Output		Efficiency (%)	
	Nominal	Range	Voltage (VDC)	Current(mA)	Vin (Min)	Vin (Max)
HP78-1.5-1	12	4.75~18	1.5	1000	78	72
HP78-1.8-1	12	4.75~18	1.8	1000	82	76
HP78-2.5-1	12	4.75~18	2.5	1000	87	82
HP78-3.3-1	12	4.75~20	3.3	1000	90	83
HP78-5.0-1	12	6.5~20	5.0	1000	93	85

OUTPUT CHARACTERISTICS

Parameter	Conditions	Min	Typ.	Max.	Units
Output voltage accuracy	100% full load, input voltage range		±2	±3	%
Line regulation	Vin=min. to max, at full load		±0.5	±0.75	
Load regulation	10% to 100% load		±0.5	±1.0	
Ripple & Noise	20MHz bandwidth,(refer to figure 3)		25	45	mvp-p
Short circuit protection			Continuous, auto-recovery		
Thermal shutdown	Internal IC junction		150		℃
Output current limit			3000		mA
Switching frequency	Full load, input voltage range	335	385	435	KHz
Dynamic load stability				±100	mA
Quiescent current	Vin from min to max and at 0% load		7	10	mA
Temperature coefficient	–40℃~+85℃			±0.02	%/℃
Max capacitance load				1000	μF

All specifications typical at TA=25°C, nominal input voltage and rated output current unless otherwise specified.

COMMON SPECIFICATIONS

Parameter	Conditions	Min.	Typ.	Max.	Units
Storage humidity range				95	℃
Operating temp. range	Power derating (above 71°C)	-40		85	
Storage temp. range		-55		125	
Storage temp. Range Temp rise at full load				100	
Lead temperature	1.5mm from case for 10 seconds			300	
Cooling		Free air convection			
Case material		Plastic (UL94-V0)			
MTBF	25℃ (MIL-HDBK-217F)	2000			k hours
Weight			2.0		g

INDUKTIVITÄTEN
STROMVERSORGUNGEN
BLECHBEARBEITUNG
MAGNETISCHE ABSCHIRMUNGEN

V1.1/0318 • Stand 0318 • Irrtümer vorbehalten • Copyright © 2018 by HAUFE GmbH & Co. KG

TEMPERATURE DERATING GRAPHS

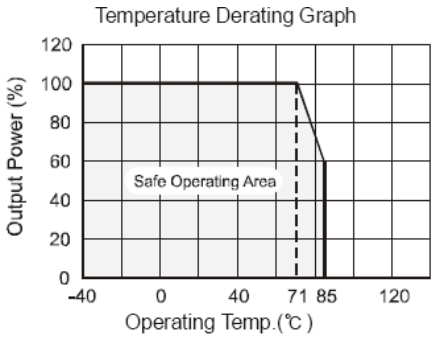

EXTERNAL CAPACITOR TABLE

Part Number	C1(Ceramic Capacitor)	C2(Ceramic Capacitor)
HP78-1.5-1	10μF/25V	22μF/6.3V
HP78-1.8-1	10μF/25V	22μF/6.3V
HP78-2.5-1	10μF/25V	22μF/10V
HP78-3.3-1	10μF/25V	22μF/16V
HP78-5.0-1	10μF/25V	22μF/16V

STANDARD APPLICATION CIRCUIT

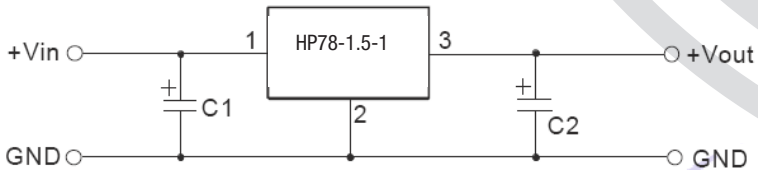

Note:

1. C1 and C2 are required and should be fitted close to the converter pins.
2. The capacitance of C1,C2 sees external capacitor table, it can be increased properly if required, and tantalum or low ESR electrolytic capacitors may also suffice.
3. No parallel connection or plug and play.

TEST CONFIGURATIONS (TA=25°C)

1.Efficiency and Output Voltage Ripple Test

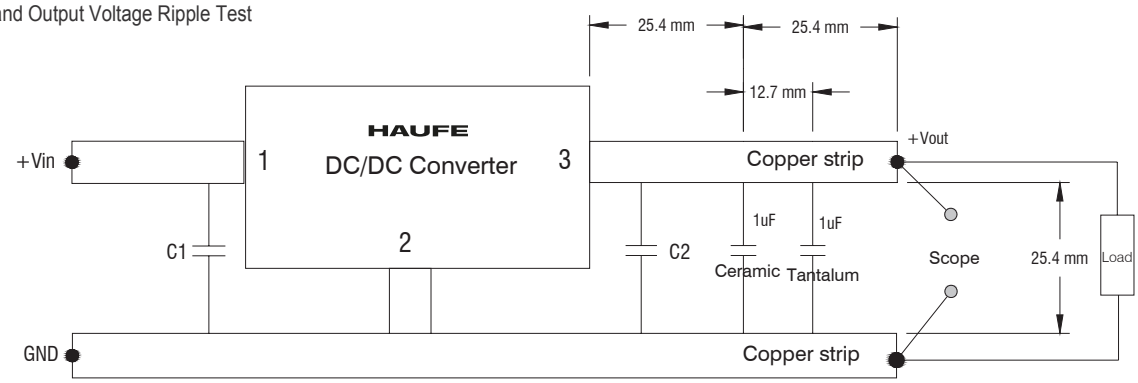

2.Start-up and Load Transient Response Test

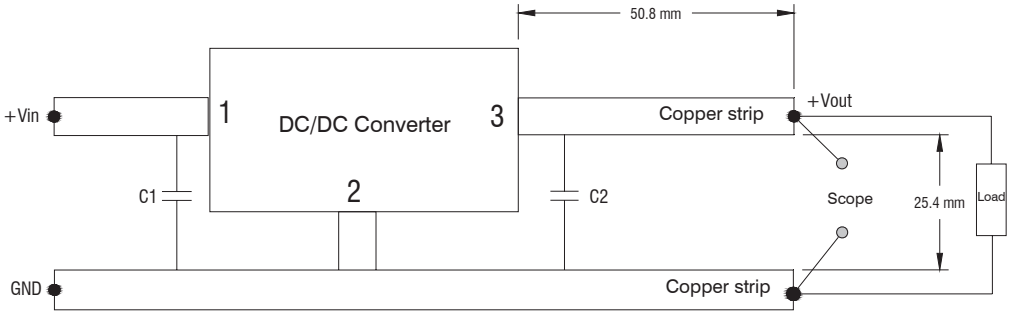

V1.1/0318 • Stand 0318 • Irrtümer vorbehalten • Copyright © 2018 by HAUFE GmbH & Co. KG

INDUKTIVITÄTEN
STROMVERSORGUNGEN
BLECHBEARBEITUNG
MAGNETISCHE ABSCHIRMUNGEN

OUTPUT RIPPLE REDUCTION

To reduce output ripple, it is recommended to add a LC filter in output port. L: Recommended parameter 10 μ H ~ 47 μ H.

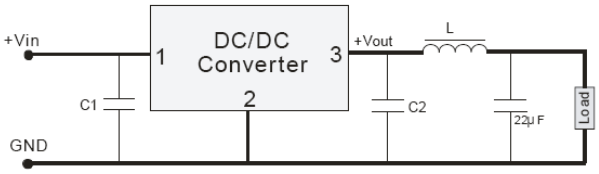

MECHANICAL DIMENSIONS

SIP Package

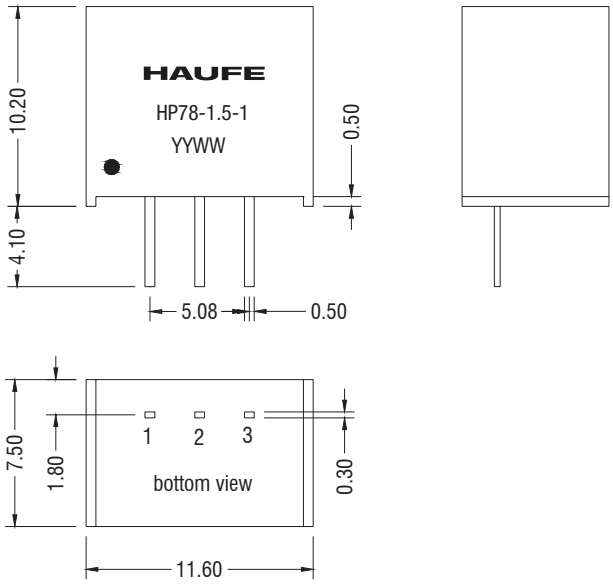

All dimensions in mm ±0.25.All pins on a 2.54mm pitch.

PIN CONNECTIONS

Pin	Function
1	+Vin
2	GND
3	+Vout

RECOMMENDED FOOTPRINT DETAILS

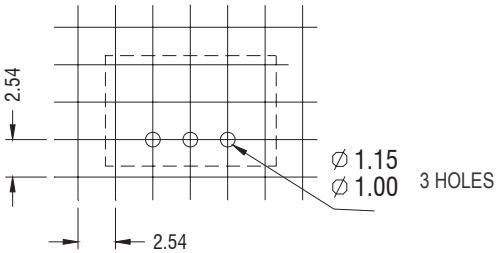

Unless otherwise stated all dimensions in mm ±0.5mm.

TUBE OUTLINE DIMENSIONS

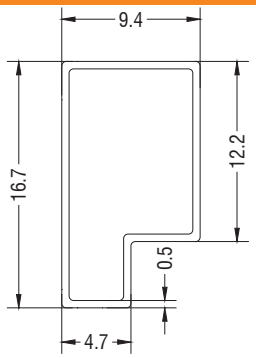

Unless otherwise stated all dimensions in mm ±0.5mm.
L=520mm ±2mm Packaging quantity:43PCS
L=220mm ±2mm Packaging quantity:17PCS

INDUKTIVITÄTEN
STROMVERSORGUNGEN
BLECHBEARBEITUNG
MAGNETISCHE ABSCHIRMUNGEN

V1.1/0318 • Stand 0318 • Irrtümer vorbehalten • Copyright © 2018 by HAUFE GmbH & Co. KG

www.haufe-uebertrager.de

HAUFE GmbH & Co. KG

Zentrale Usingen:
Weilburger Straße 14 • 61250 Usingen • Tel.: +49 (0) 6081–9153-0
info@haufe-uebertrager.de

Werk Beierfeld:
August-Bebel-Straße 131 • 08344 Grünhain-Beierfeld • Tel.: +49 (0) 3774–176428-0
info@haufe-metall.de

BLECHBEARBEITUNG
MAGNETISCHE ABSCHIRMUNGEN
INDUKTIVITÄTEN
STROMVERSORGUNGEN

HAUFE®
„PRECISION FOR YOUR SUCCESS"
... since 1947

V1.1/0318 • Stand 0318 • Irrtümer vorbehalten • Copyright © 2018 by HAUFE GmbH & Co. KG